SOFiSTiK

SOFiMSHA

Import and Export of Finite Elements

SOFiSTiK | 2026

SOFiMSHA
Import and Export of Finite Elements

SOFiMSHA Manual, Service Pack 2026-2 Build 114

Copyright © 2025 by SOFiSTiK AG, Nuremberg, Germany.

SOFiSTiK AG

HQ Nuremberg
Flataustraße 14
90411 Nürnberg
Germany

T +49 (0)911 39901-0
F +49(0)911 397904

Office Garching
Parkring 2
85748 Garching bei München
Germany

T +49 (0)89 315878-0
F +49 (0)89 315878-23

info@sofistik.com
www.sofistik.com

This manual is protected by copyright laws. No part of it may be translated, copied or reproduced, in any form or by any means, without written permission from SOFiSTiK AG. SOFiSTiK reserves the right to modify or to release new editions of this manual.

The manual and the program have been thoroughly checked for errors. However, SOFiSTiK does not claim that either one is completely error free. Errors and omissions are corrected as soon as they are detected.

The user of the program is solely responsible for the applications. We strongly encourage the user to test the correctness of all calculations at least by random sampling.

Front Cover

© Autobahn GmbH des Bundes | Photo: Christoph Seelbach

Contents

Contents i

1 Task Description 1-1

2 Theoretical Principles 2-1
2.1 Coordinate Systems . . . 2-1
2.1.1 Sequential Rotations . . . 2-1
2.1.2 Incremental Isotropic Rotations . . . 2-2
2.2 Overview of the Element Types . . . 2-3
2.2.1 Nodes . . . 2-3
2.2.2 Truss and Cable Elements . . . 2-3
2.2.3 Beam and Pile Elements . . . 2-3
2.2.4 Plane Elements . . . 2-3
2.2.5 Solid Elements . . . 2-5
2.2.6 Spring Elements . . . 2-6
2.3 Mesh Partitioning . . . 2-6
2.3.1 Loads . . . 2-6
2.3.2 Beam Elements . . . 2-7
2.4 Plane Elements . . . 2-7
2.5 Solid Elements . . . 2-9
2.6 Boundary Conditions . . . 2-9
2.6.1 Skewed Supports . . . 2-9
2.6.2 Rigid Body Couplings . . . 2-10
2.6.3 Symmetry Conditions . . . 2-10
2.6.4 Eccentric Connections . . . 2-10
2.6.5 Slave Systems . . . 2-10
2.6.6 Mindlin Plate Boundary Conditions . . . 2-10
2.7 Joists . . . 2-11
2.8 Literature . . . 2-12
2.9 Limitations . . . 2-12

3 Input Description 3-1
3.1 Nodes . . . 3-1
3.2 Elements . . . 3-1
3.3 Results . . . 3-2
3.4 Restart . . . 3-2
3.5 Input Records . . . 3-2
3.6 Hints for Transition from GENF . . . 3-5
3.7 SYST – Global System Definition . . . 3-6
3.8 CTRL – Control of Analysis . . . 3-9
3.9 GRP – Group Control . . . 3-12

3.9.1 Primary Groups . . . 3-12
3.9.2 Secondary Groups . . . 3-14
3.10 NODE – Nodes, Coordinates and Constraints . . . 3-17
3.10.1 Coordinates . . . 3-18
3.10.2 Nodal generations (MESH and IMSH) . . . 3-20
3.10.3 Nodal sequences (FIT) . . . 3-20
3.10.4 Support Conditions . . . 3-21
3.10.5 Kinematic Constraints . . . 3-22
3.10.6 Hanging nodes . . . 3-25
3.10.7 Equivalent stress transformations (EST) . . . 3-27
3.11 EDGE – Edge Definition . . . 3-29
3.12 KINE – Kinematic Dependencies . . . 3-30
3.13 GETN – Enquire node or element number . . . 3-32
3.14 TRUS – Truss Elements . . . 3-33
3.15 CABL – Cable Elements . . . 3-35
3.16 BEAM – Beam Elements . . . 3-37
3.16.1 Plane Beam Coordinate System . . . 3-38
3.16.2 Spatial Beam Coordinate System . . . 3-39
3.16.3 Haunches, sections and continuous beams . . . 3-41
3.17 BSEC – Beam Sections . . . 3-43
3.17.1 Special properties of beam sections . . . 3-44
3.17.2 Haunches and interpolation of sections . . . 3-44
3.17.3 Element-Formulation . . . 3-45
3.18 QUAD – Plane Elements (Disks / Plates / Shells) . . . 3-47
3.19 BRIC – Three-dimensional Solid Elements . . . 3-52
3.20 SPRI – Spring Elements . . . 3-55
3.20.1 Spring element . . . 3-57
3.20.2 Special hints: . . . 3-60
3.20.3 Damper . . . 3-60
3.21 BOUN – Distributed Support . . . 3-62
3.22 ADDM – General Matrix Element . . . 3-66
3.23 FLEX – General Elastic Element . . . 3-68
3.24 MASS – Concentrated Masses . . . 3-69
3.25 SBOX – Special selections . . . 3-71
3.26 DEL – Delete Elements . . . 3-73
3.27 MOD – Modify . . . 3-74
3.28 TRAN – Transformations . . . 3-76
3.29 EXTR – Extrusion and sweeping of elements . . . 3-80
3.29.1 SNAP . . . 3-82
3.29.2 Spring Properties . . . 3-83
3.29.3 Examples . . . 3-83
3.30 LOFT – Lofting / Interpolation . . . 3-84
3.30.1 Examples . . . 3-85
3.31 MIRR – Mirroring . . . 3-86
3.32 UMSH – Unstructured Mesh Generation . . . 3-88
3.32.1 UBND – Boundary definition for UMSH . . . 3-89
3.32.2 2D Mesh Generation . . . 3-89
3.32.3 3D Mesh Generation . . . 3-90
3.33 INTF – Generation of interfaces . . . 3-92

3.34 RSET – Result Set 3-94
3.35 EXPO – Ansi Export of Data 3-96
3.36 IMPO – Import of Data 3-97
3.36.1 Generic Import Interface 3-98
3.37 ECHO – Control of the Output 3-99

4 Output Description 4-1
4.1 Group Attributes 4-1
4.2 Nodal Values 4-1
4.3 Plane Elements (2-D, QUAD) 4-3
4.4 Three-dimensional Solid Elements (3-D, BRIC) 4-4
4.5 Boundary Elements 4-4
4.6 Bending Beams and Piles 4-6
4.7 Truss Elements 4-6
4.8 Cable Elements 4-7
4.9 Springs 4-7
4.10 System Statistics 4-8
4.11 Analysis Time per Task 4-9

Bibliography 4-11

1 Task Description

Any structure, like a plane structure for example, must in general be interpreted as a geometrical infinitely indeterminate structure. The Finite Element method is now used to convert this infinite system to a finite one, i.e. to discretizise it.

A discrete solution, consisting of n unknowns, is computed instead of the continuous solution. For the static analysis these unknowns are for instance the displacements of particular points, the so-called nodes. These nodes are connected to each other by means of mechanically simplified members, the so-called elements. One can obtain the displacements of the entire region through interpolation of the nodal values inside the elements. The continuous plane structure is thus represented by a large - yet finite - number of elements.

The power of Finite Elements lies in their universal applicability to any geometrical shape and almost any loading. This is achieved by the following building block principle. Individual elements, which describe parts of the structure in a computer oriented manner, are assembled into a complete structure. Regular frame structures must be understood as a special case of this principle, in which a finite number of nodes leads to an exact solution.

The task of SOFIMSHA is to export or import the total volume of nodes and elements with high effectiveness. Generating features are on a first glance left to the CADINP possibilities, however there are very mighty options available for the generation, copying and extrusion. Complex irregular structures should be defined via SOFIMSHC or SOFiPLUS.

Exactly one database is available for each system, to which each module has unlimited access. A system is seen as the entirety of the parts forming a structure or a substructure, which cooperate statically during the systems life-span. During the design a partial system can be analysed separately.

With a restart one may modify boundary conditions or add new nodes and elements. Elements may be changed, however nodes and especially used nodes are not allowed to have their coordinates changed.

2 Theoretical Principles

2.1 Coordinate Systems

The coordinate systems and the notations conform to DIN 1080.

The nodal coordinates, displacements and rotations as well as loads and reaction forces are described in a global cartesian right-handed system X-Y-Z. The input can also be given in polar, cylindrical or spherical coordinates, which are however transformed automatically by the program to cartesian ones. Local coordinate systems, which are described in the next section, exist for the elements as well.

The displacements and rotations are vectors with three components along the coordinate directions. These components are positive when they act in the positive coordinate axis direction. Rotational components are positive if they rotate clockwise about the given axis when looking into the positive direction of the axis. The same holds for forces and moments. For warping torsion we have a seventh scalar degree of freedom for the warping.

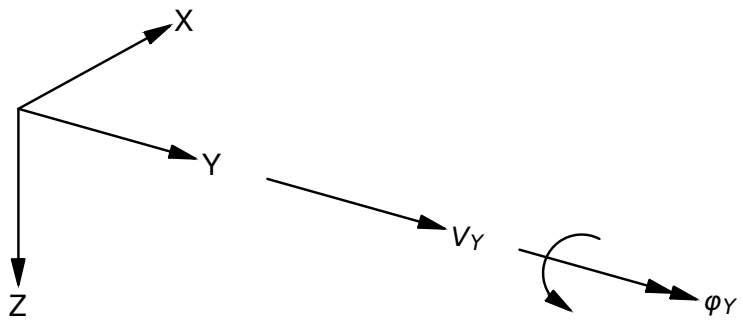

Figure 2.1: Coordinate system

If the observer is looking from the birds eye view he will believe to see a right or left handed 2D coordinate system depending on the orientation of the vertical axis . We use the designation of the "first" and the "second" horizontal axis in the counter clock wise orientation. It is advisable in some countries to define the global coordinate system such that the Z-axis coincides with the direction of gravity. In case of plane structures only the Y-X plane is considered. For axisymmetric analysis the X-axis is the axis of rotation.

A general 3D rotation of the coordinate system (NODE, TRAN, MATE etc.) is not a simple task and may be performed within SOFiSTiK with different methods:

2.1.1 Sequential Rotations

This is for example a sequence of three independent rotations with the so called Eulerian angles as they are used in rock mechanics:

- The precision or meridian angle ψ rotates the coordinate system about the vertical z-axis
- The nutation or tilting angle ϑ rotates about the new x'-axis of the coordinate system
- An angle of the pure rotation φ rotates about the now inclined z"-axis

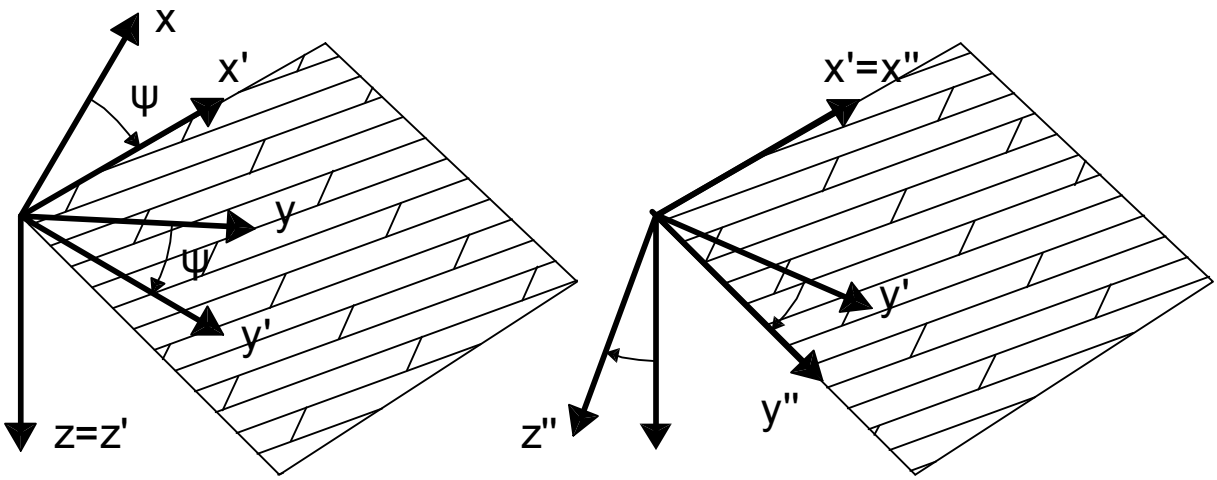

Figure 2.2: The sequence of the rotations may not be interchanged!

2.1.2 Incremental Isotropic Rotations

From Argyris came the idea to get rid of the sequential dependence by small simultaneous incremental rotations. The solution of the non-linear transformation equation may be done with an eigenvalue analysis explicitly:

$$\begin{vmatrix} 1-\left(\Phi_y^2+\Phi_z^2\right)\cdot CC & \Phi_z\cdot sin\psi+\Phi_x\Phi_y\cdot CC & -\Phi_y\cdot sin\psi+\Phi_x\phi_z\cdot CC \\ -\Phi_z\cdot sin\psi+\Phi_x\Phi_y\cdot CC & 1-\left(\Phi_x^2+\Phi_z^2\right)\cdot CC & \Phi_x\cdot sin\psi+\Phi_y\Phi_z\cdot CC \\ \Phi_y\cdot sin\psi+\Phi_x\Phi_z\cdot CC & -\Phi_x\cdot sin\psi+\Phi_y\Phi_z\cdot CC & 1-\left(\Phi_x^2+\Phi_y^2\right)\cdot CC \end{vmatrix} \tag{2.1}$$

$$\psi^2 = \phi_x^2 + \phi_y^2 + \phi_z^2 \tag{2.2}$$

$$\Phi_x = \frac{\phi_x}{\psi} \;;\; \Phi_y = \frac{\phi_y}{\psi} \;;\; \Phi_z = \frac{\phi_z}{\psi} \;;\; CC = 1-cos\psi \tag{2.3}$$

The angles ϕ_i define a rotation tensor. With only one rotation component the classical rotation transformation is obtained. The difference to the sequential rotations becomes apparent if we consider the transformation of the vector (1,0,0) into the space diagonal (a,a,a) where (a = $1/\sqrt{3}$). Sequential this may be accomplished by a precision of 45 degrees and a nutation of arcsin($1/\sqrt{3}$) = arctan($1/\sqrt{2}$) = 35.264 degrees. The space angle between the original and the image is given by arccos($1/\sqrt{3}$) = arctan($\sqrt{2}$) = 54.736 Grad. As this is the total rotation angle ψ,the rotation tensor is given by $\phi_y = \phi_z = 54.736/\sqrt{2} = 38.704$ degrees.

As these angles are not very easy to use, there is also the possibility to work with quasi spherical coordinates by modifying the above equations slightly according to the following:

$$tan^2\psi = tan^2\phi_x + tan^2\phi_y + tan^2\phi_z \tag{2.4}$$

$$\Phi_x = \frac{tan\phi_x}{tan\psi} \;;\; \Phi_y = \frac{tan\phi_y}{tan\psi} \;;\; \Phi_z = \frac{tan\phi_z}{tan\psi} \tag{2.5}$$

Now the space diagonal is reached with the values $\phi_y = \phi_z = 45.0$ degree, but an angle of exactly 90 degrees may no longer be treated in all cases, although some cases are allowed.

2.2 Overview of the Element Types

2.2.1 Nodes

Nodes are no elements in the general sense, they may be created automatically for any generation of elements. There is geometric filtering avoiding to generate double nodes at a given position. If a special or multiple node numbers should be used at a selected position, it is therefore necessary to define that node before any generation takes place.

A very important feature is a list of nodes, called a FIT within SOFIMSHA / SOFIMSHC. These lists are saved to the database and my be used as a singkle element, partly or in combination for other generations, loadings or boundary conditions. A FIT will be created for any generation of nodes along a line automatically, but it may be created also from existing nodes by a special selection. If that selection requires a combination of lists, the sequence is calculated on base of a minimum travelling path measured in number of nodes.

2.2.2 Truss and Cable Elements

The truss or cable element can only carry one constant axial force. In case of a non-linear analysis, the cable element can not sustain any compression. For the local coordinate axis only the x-axis of the beam direction is available.

2.2.3 Beam and Pile Elements

These elements are defined by two nodes and their straight connection, which is either the centrobaric axis or the origin of the sectional coordinate system. It is also the x-axis of the local coordinate system. The element in-between can either be prismatic or arbitrarily haunched with cross section jumps. Several elements may be combined with the same or a continuous number to a continuous beam element. In case of plane structures the direction of the z-axis is defined such that this is the main laoding direction, i.e. bending occurs only about the y-axis. In case of three-dimensional structures however, the orientation of the coordinate system should be specified explicitly.

The cross section is defined with the program AQUA, in any parallely shifted y'-z' coordinate system. Internal forces and moments of the beams are positive, when they act at the positive section in the positive direction.

2.2.4 Plane Elements

The plane element of SOFiSTiK is a general quadrilateral element with four nodes (QUAD), which can degenerate to a triangle. The structural behavior is modeled with separate plane elements for membrane shear and plate bending. As the hyperbolic geometry of a quadrilateral element is accounted for a coupling of both effects, this element may describe curved shells with sufficient precision. A triangular element is not suited for that purpose!

The sixth degree of freedom, the rotation within the plane of the membrane part is accounted for by different methods:

- Small artificial stiffness to avoid numerical problems
- Internal constraint from the differences of the displacements (ASE)

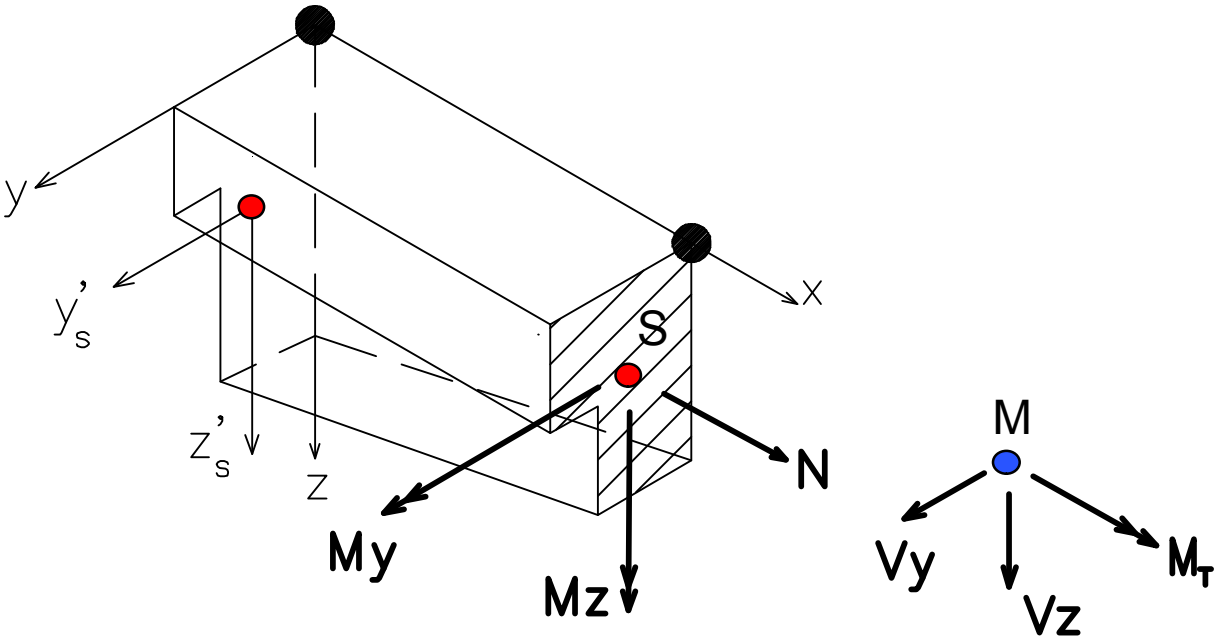

Figure 2.3: Local coordinate system of a beam

- Variational approach according Hughes with a rotational field (DYNA)

The plate bending properies are avaluated according to the Reissner-Mindlin theory. Due to the usage of discrete Kirchhoff conditions and an optional penalty term for the shear deformation, it is applicable for thin plates or shells The simplest implementation is equivalent to the Bathe-Dvorkin element. A significantly improved accuracy is achieved through non-conforming or "'assumed strains"' formulations. Especially the constant bending properties of a rectangular single element do match those of a beam element. Thus the implementation of higher order isoparametric elements with six to nine nodes is not necessary.

There is always a local coordinate system for internal forces and loads. Note that the indexes of the designation used for moments and shear forces, rather describe their position and not their direction. Thus a plate moment m-xx corresponds to a moment vector MY.

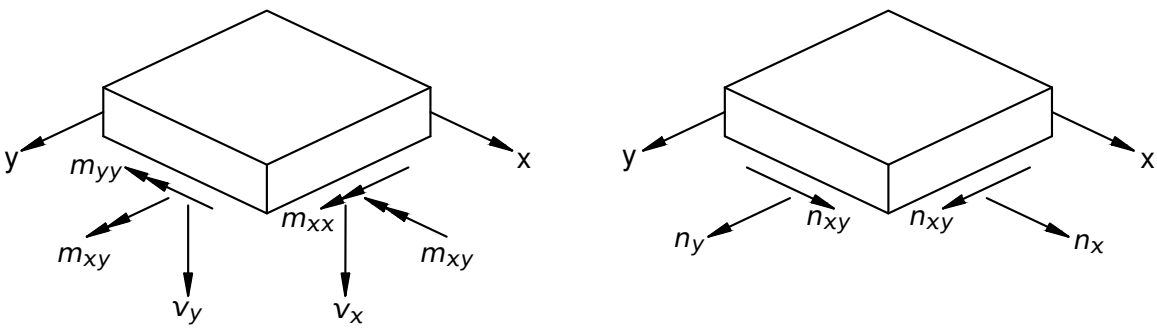

Figure 2.4: Forces and Moments of plates

For planar systems, the default of the local coordinate system is equal to the global coordinate system. The local coordinates may be defined as follows:

The local z-axis is perpendicular to the midplane of the element and it is defined by the vector product of the node diagonals (3-1) x (2-4). If one numbers the element nodes counter-clockwise, then one looks into the positive z-direction from "above". Positive moments cause tension on the opposite bottom side of the plate.

The local x- and y-axes both lie within the element's plane. The sign of the x- and y-axes is only meaningful for loadings or the results of shear forces.

The local x-axis can be oriented, upon request, inside the surface of an element with a slight deviation with respect to the positive or negative direction of any of the three global coordinate axes.

If no such request is made, the local x-axis will lie in the element's plane parallel to the global X-Y plane, such that the angle of the projection on the X-Y plane and the global X-axis will not be larger than 90 degrees.

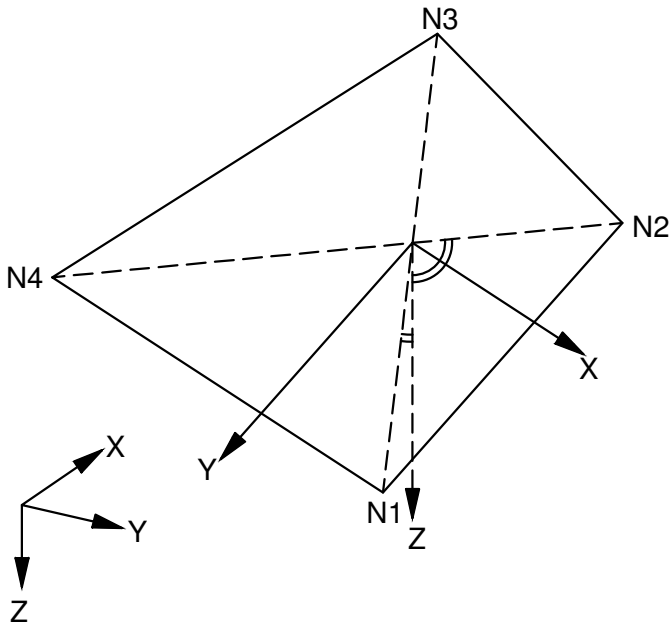

Figure 2.5: Local coordinate system for plane elements

2.2.5 Solid Elements

The solid element of SOFiSTiK is a general six-sided element with eight nodes (BRIC), which can degenerate down to a tetrahedron. As a rule, a significantly improved accuracy is achieved through non-conforming formulations, so that the introduction of the 21-noded elements is not necessary.

The element does not possess a local coordinate system of its own, and stresses are always output for their global components. The surfaces can be described by special QUAD-elements, which can also be employed for the display of stresses in the BRIC-elements.

2.2.6 Spring Elements

Elastic elements with general properties are available in several variants:

- Anisotropic spring element with non-linear effects between two nodes or as a support condition (SPRI)
- Generalised stiffness with up to six nodes (FLEX)
- Elastic foundation along a line with a boundary element (BOUN) Plane foundation for quadrilateral elements (QUAD) in the local z-direction and/or tangential

2.3 Mesh Partitioning

The partitioning of a mesh is based on two requirements. On the one hand the mesh should be as fine as possible, so as to obtain the most accurate results. The factors opposing that are:

- The computing times increase by n^2, when the number of elements n are increased.
- In case of very fine partitioning, round-off errors are amplified so that the solution may become unusable. As a rule of thumb, a logical partitioning of a free span consists of 5 up to 20 elements.
- In construction practice it is not sensible to attempt to model and design all types of singularities. One should strive for a partitioning that is not too fine.

2.3.1 Loads

The Finite-Element system is a discrete system and it can thus only handle discrete loads. Every loading must therefore be converted to so-called nodal loads. A nodal load should not be confused with a point load. The difference is illustrated in the following figure

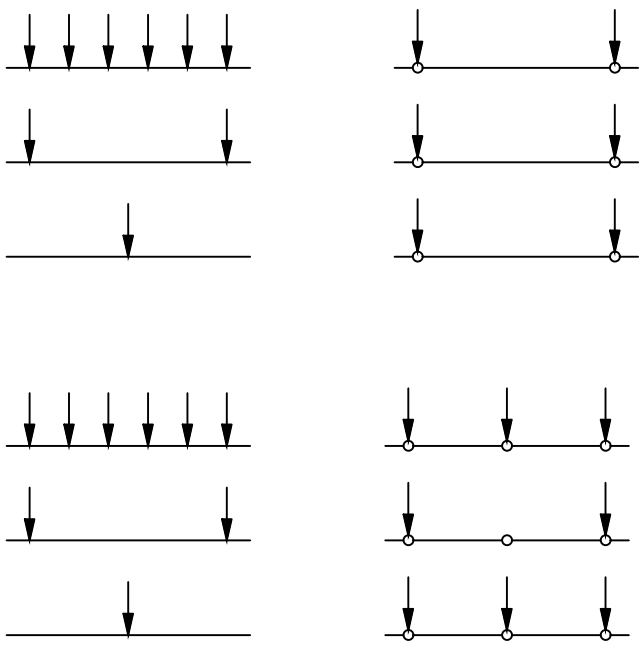

Figure 2.6: Nodal loads

A mesh refinement leads to new nodal loads in case of a uniform load (a and d), but not in case of point loads.

On one hand, this means that a given mesh has a limited resolution for loadings. The coarser mesh (a, b, c) can not make the differentiation between two point loads and a uniform load upon the element grid or a point load at the middle of the element.

It also means on the other hand, that a loading can be applied as a point load on a node only when its load induction area is smaller than the size of the adjacent elements. When inducing , for example, a point load upon a plate, each new mesh refinement in the area of the load will compute larger shear forces each time, due to the better modelling of the singularity. Therefore, one should either select an element size that will not be smaller than the plate thickness, or define the loads in the form of distributed loading with their actual contact surfaces.

2.3.2 Beam Elements

To a large extent an exact description of the geometry is possible in the case of beam elements. A single beam element may be used from one support to the next. However, a typical FE partitioning of the geometry is necessary in the following cases:

- Kinematic constraint with elastic foundation (Boundary element)
- Dynamic analyses (nodal masses)
- Buckled centrobaric axis (e.g. haunches)
- Large deformations according to 3rd order theory

The partitioning may only become so fine, that the lengths of the individual beams are approximately the same as their cross section dimensions. When their lengths become smaller than these dimensions, it is required that the correct shear deformation areas of the cross sections are defined. Artificially large stiffnesses must also be avoided, as well as the direct combination of elements with very different lengths.

The results of the element can be obtained at all of its sections. Superpositioning and dimensioning can only take place at these sections.

2.4 Plane Elements

For the geometry, squares and equilateral triangles are the optimal shape. Certain deviations from this shape are allowed, as long as no re-entrant corners appear. Two triangles are not equivalent to a quadrilateral, since the quadrilateral possesses at least six internal stress states whereas the triangle only one. Quadrilateral meshes are therefore always preferable to mixed or pure triangular meshes. Any triangular element partition can be converted to a pure quadrilateral mesh:

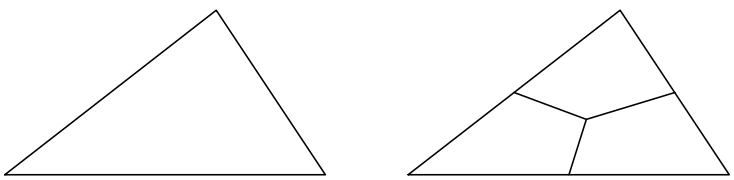

Figure 2.7: Conversion of triangular mesh to quadrilateral mesh

This method can for example also be used to easily partition a circular plate with quadrilateral elements:

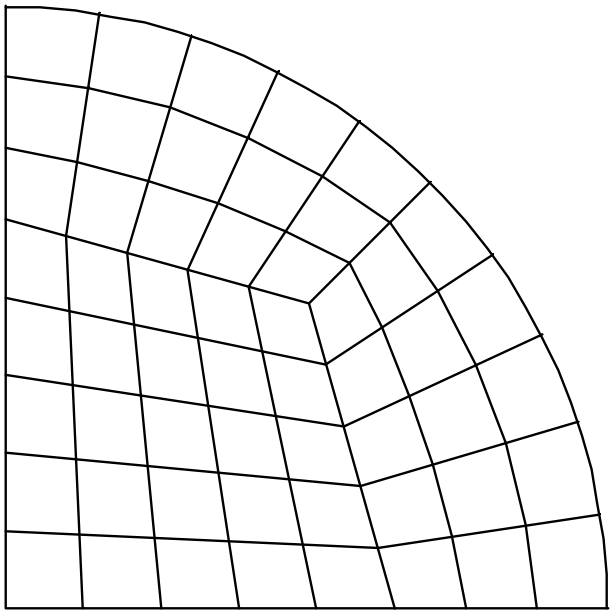

Figure 2.8: Partitioning of a quarter-plate

The results for this element are obtained at the following points:

- At the centre of the element
- At the so-called Gauss-points inside the element
- As extrapolated average values at the nodes

The values at the element's centre point must be used for the dimensioning of the element. The so computed value of the required reinforcement must then be applied to the entire area of the element. Through proper selection of the element size and location, one can carry out direct calculations conforming to the various design rules. In case of wide supports or restraints it is for example sensible to place the centre of the element on the edge of the support.

The Gauss-points are only necessary for the accurate capture of the element's stress state and are usually not needed by the user.

The values at the element nodes can be extrapolated from the Gauss-points. Due to the approximate formulation of the FEM-solution these values are not identical at a node, therefore the average value is computed. These values are of prime importance for the graphical representations. However in case of coarse element partitioning, the nodes at fixed edges or point supports should also be considered during the design, because otherwise the maximum values are not captured.

Special care should be taken for three-dimensional structures or load application regions in order to avoid the averaging of all the internal forces and moments at the nodes. In case of sudden changes in the element thickness the dimensioning should be made separately on each side.

The nodal values can also be used in calculating an error-indicator for the assessment of the accuracy of the solution, this is done for each element by an integration of the deviations

between extrapolated and average values.

2.5 Solid Elements

Whatever was said for the QUAD-elements essentially holds for the solid elements as well.

2.6 Boundary Conditions

For the simplest case the boundary conditions at the nodes are specified by suppressing the corresponding degrees of freedom. An elastic support is obtained by means of appropriate elements.

There is however a frequent need for special support conditions, which the engineer would like to model using infinitely large stiffnesses. Due to numerical reasons the modelling should not be done with elements possessing very large stiffnesses, but with dependent degrees of freedom (kinematic constraints) instead. The need for such constraints arises e.g. for oblique supports or rigidly connected nodes. In general, every dependent degree of freedom can be expressed as a linear combination of other displacements or rotations:

$$d_a = a_1 d_1 + a_2 d_2 + \ldots \tag{2.6}$$

These conditions are explicitly considered in the assembly of the global stiffness matrix and they are therefore numerically stable instead of any artificially rigid elements.

These combinations can be directly formulated with the record KINE and they can be arbitrarily convoluted. However, the memory requirements for solving a problem increase with the number of constraints and especially with the number of recursive associations.

Coupling conditions have a distinct direction, they can be defined recursively up to 99 levels. Cyclic references or overlapping reference definitions are not possible however. When defining the boundary conditions multiple definitions will be combined in general based on a vector approach.

Standard conditions are available for the most frequent cases of constraints in the record NODE and the node coupling conditions.

In the node output dependent degrees of freedom are designated by a * or a negative equation number. All displacements are always output, and they comply to the specified dependencies. With ECHO REAC (program ASE, SEPP, TALPA ...) the support reactions can either be calculated separately for each node or in pairs for coupled nodes; in the latter case they represent the forces transmitted through the kinematic constraint.

Attention: Inappropriate use of kinematic constraints of the KINE type or the slave kinematic constraints (KPX through KPZ) may lead to mechanically absurd results (forces moved by kinematic constraints may violate the moment equilibrium).

2.6.1 Skewed Supports

A skewed support for a node can be always described by a single direction. The node is then either only supported in that direction (PR or MR) or it is supported in all directions transvers to that direction (PT or MT) . The latter case then allows a displacement only in that selected direction.

2.6.2 Rigid Body Couplings

All couplings between distant nodes will generate rigid body contributions which are needed to fulfill the equilibrium of moments. The kinematic constraints KP, KL, KQ and KF describe rigid bodies to which the dependent nodes are connected through a hinge (KP), or through a connection with fixed rotation about one (KQ=KP+KMR), two (KL=KP+KMT) or all three (KF) directions. One single plane may be activated in special cases (KPEX, KPEY, KPEZ and KFEX, KFEY, KFEZ). This is for instance the case when defining a slab, which allows lateral bending but not in-plane distortion.

2.6.3 Symmetry Conditions

Symmetry conditions are a rarely needed special case of kinematic constraints. Whereby the respective symmetry or anti-symmetry conditions are assigned to the mid-perpendicular of the line connecting two nodes. In most cases the definition of a symmetry condition is more sensible by means of an inclined support. The direction of the support must then be perpendicular to the symmetry plane. PRMT defines a symmetry and PTMR an anti-symmetry.

2.6.4 Eccentric Connections

Eccentric connections, e.g. between a beam and a plate, can be specified with KF. Beam elements may have explicit excentricities or implicit by the definition of the sectional coordinate system. For shell elements the mid surface or the upper or lower side may be positioned in the plane of the nodes.

2.6.5 Slave Systems

A special class of kinematic constraints imposes the same displacements or rotations to several nodes (KPX to KMT). Their application is useful e.g. in the description of rigid foundation plates, which are not allowed to rotate. These kinematic constraints act upon particular degrees of freedom and are thus more flexible. The danger on the other hand is that their inappropriate use can produce undesired offset moments.

2.6.6 Mindlin Plate Boundary Conditions

The formulation of the boundary conditions of plate elements is not uncritical. Especially the Mindlin-element has some peculiarities which should be considered.

According to Kirchhoff's theory two internal forces exist at an edge, namely the bending moment and the equivalent shear force. The latter consists of the shear force and the torsional moment, and that is why both can have values along a free edge different from zero. By contrast, Mindlin's theory recognises three support conditions for the three internal forces i.e. bending moment, torsional moment and shear force. A support for the torsional moment would for example suppress the rotations perpendicular to the edge.

Free edges

Free edges do not have constraints of any type. The reaction forces along such edges are, within the bounds of computing accuracy, zero. However the internal forces inside the elements are not always exactly zero, due to the numerical method.

Fixed edges

Perfectly fixed edges can be input without any problems. For the interpretation of the results

however, it is important to know that the torsional reaction moments must be taken up. This takes place automatically in the output of the BOUN-elements, whereby these are converted to corresponding support loadings.

Simply supported edges

Here one has a choice between the so-called soft support (only PZ) and the hard support (PZ+MT). In case of the soft support, shear deformations are still allowed along the edge, and thus a shear force too; in some cases this can lead to considerable deviations from Kirchhoff's plate theory. On the other hand is the soft support more suitable for the manipulation of uplifting corners as well as of re-entrant corners. Particularly in the case of obtuse corners, the hard support leads to an undesired fixation.

Simulation of supports on masonry and concrete

There are generally four ways to describe such supports:

- Point- or line-support
  This type of support is mainly used for thin supports (width < plate thickness). The size of the adjacent elements should be selected in such a way that their gravity centre lies on the round section which is critical for the punch-through check. The dimensioning of the shear force takes place inside the element; for the moment, on the safe side, in the nodes of the support.
- Pivoting column head support
  The column is described by a node having a fixed support and a possible rotational spring stiffness, this node is usually is not an element node. The column area is described by means of a single element as well as coupling conditions between the four element nodes and the column node, which specifies that the cross section will remain plane without a restraint of the moment (KP for columns, KQ for walls). The size of the element can be between 2/3 of the column area (e.g. for circular columns) and the actual column area (e.g. for rectangular column cross section). The size also depends on where one wants to arrange the resultant of the bearing stress.
  The central element has a zero shear force and thus a uniform moment corresponding to the moment of the section along the face of the column. One should arrange additional elements for the shear force check, whereby their gravity centre lies on the round section used for that check , or directly carry out a punch-through check.
- Elastic foundation
  This option is ideal for elastic supports of large areas, for which a rounded moment above the support is desired. Large Winkler coefficients however, result in undesired restraints. The selection of the Winkler coefficient is thus critical, and this option should only be applied to minor foundations.
- Special conditions
  In principle any arbitrary conditions can be formulated through kinematic constraints. The effect though must be checked in every case.

2.7 Joists

The modelling of joists in plate structures presents a special problem. Besides the option of modelling them with folded structure elements or solid elements, which are ruled out for

practical processing, one has a choice between two other options:

- The joist is modelled as an eccentric beam connected to a plane shell (plate- and disk action). The area of the joist and its moment of inertia are determined from the protruding part of the joist.

  For the dimensioning the results of the shell and the beam should be combined into the total internal forces and moments for a T-beam.

  This is a general method and always correct. It captures the effective widths and their distribution in the system.

- The joist is modelled as an additional element to a plate, by defining all its cross sectional values (area, moment of inertia) as follows:

  Additional values = Total values of T-beam effective
  - contributions of the plate to the effective width

  The total stiffness is correctly modelled in this manner. When dimensioning joists with small heights one should always make constructive decisions, e.g. assembling the individual values and applying them to a T-beam cross section.

2.8 Literature

Zienkiewicz [1], Ramm, Müller, and Wassermann [2], Katz and Stieda [3], Gupta [4], Zienkiewicz and Zhu [5], Katz [6], and Hartmann and Katz [7]

2.9 Limitations

The following limits can not or should not be exceeded in principle to prevent limitations for the print out (number of columns) or the adressing of input data:

Largest node number :	9 999 999	(recommended)
Largest element number:	9 999 999	(recommended)
Numbers of primary groups:	0 - 999	
Number of elements per group	999 999	

The node and element numbers are possible up to 999 999 999, but for the printout there are in most cases only seven columns available.

Each computer has a finite computing precision. This is normally 7 digits in case of 32 bits per word, and 15 digits in case of double precision. It is naturally meaningless to want to discuss about the 7. decimal digit of a final result. The danger however is that for FE-analyses, as in most cases in real life, it is not the absolute size of a displacement that is of interest, but the differences.

Because of that, all numerical calculations are sensitive to large variations in stiffnesses or small variations of element dimensions, and sometimes with a large number of elements between two boundary conditions (supports).

3 Input Description

The program SOFiMSHA generates the basic structural system for plane or three-dimensional structures. On one hand the system consists of the nodes, defined by a number, their coordinates and geometric support conditions. On the other hand there are the elements, which are connected to each other at these nodes.

For a restart of the system element properties or boundary conditions may be changed, elements may be deleted or added. Only the coordinates of any existing node may not be changed any more. The orientation of the gravity, the group divisor or any defined base number of a group may not be changed either. Thus all elements added to existing groups must fit in the assigned space of numbers.

SOFiMSHA has a more element based input mode than its predecessor GENF. Nodes will be generated mostly automatically. Nearly all elements have a mesh generation option. The basic concept is either a regular subdivision or a non-regular nodal sequence called a FIT. For more details see NODE.

Cross sections and materials have to be defined beforehand with the program AQUA.

3.1 Nodes

Nodes are assigned with a number for identification. For generation facilities new nodes will be automatically introduced or existing nodes identified with an effective octree search. Node numbers need not be in a consecutive order. The maximum value of these numbers is limited to 999999, due to the output format. The node numbering has normally no influence on the band width of the system of equations, because subsequent to the system's generation an optimisation of the profile takes place. Undefined nodes do not have any influence.

With nearly all element definitions it is possible to insert intermediate nodes automatically. This has either to be defined with the number of subdivision segments and an optional mid node, or a already defined sequence of nodes (FIT) may be used. In both cases new nodes will be compared against already existing ones and created only if necessary.

3.2 Elements

Elements are also identified by an arbitrary number within the selected element group. If the number is not specified, the element number is automatically assigned. Although an element number may only be used once for each element type. Elements can only be defined once.

The element number contains the group number. The latter is for example the integer part of the element number divided by a freely defined divisor. The default value of this divisor GDIV of the record SYST is 0, i.e. all elements are assigned to group 0. If the elements are subdivided into groups with a different value for GDIV, any elements of the group 0 that follow a group initiation with the record GRP are assigned to that group by their element number, i.e. the program changes the element numbers so that they fit into the active group.

Groups can be used to select a particular structural system or to define partial regions for post-processing or graphical representation. A sensible partitioning of a structure into such groups can be very helpful when evaluating the internal forces and moments at nodes. In case of

folded structures, one should arrange the elements of each disk into separate groups.

It is advantageous to number the elements in such a way, so that one can make use of the generation options during the system selection (groups) and the loading input (refer to STAR2, beam groups).

The theoretical principals of the elements are described in the calculation programs.

3.3 Results

The created structure is stored in the database (project file) and it can be represented graphically by the program WinGRAF; this can even be done for faulty systems, as long as the program has not terminated prematurely. Further processing of the analysis with other programs is only possible when the structure is free of errors.

When no errors are detected, a profile optimisation is performed on the stiffness matrix, in order to minimise the cost of solving the system of equations for the structure.

3.4 Restart

At any time boundary conditions can be modified or new elements may be added with a Restart. However, existing elements and nodal coordinates remain unchanged. A restart takes place with the explicit input SYST REST. The following can be included in a Restart input:

- Change support conditions and constraints for existing nodes
- Add New nodes and new elements
- Change element properties
- Delete Elements

3.5 Input Records

The input is made in the CADINP language (see general manual SOFiSTiK: 'Basics'). Three categories of units are distinguished:

mm **Fixed unit**. Input is always required in the specified unit.

[*mm*] **Explicit unit**. Input defaults to the specified unit. Alternatively, an explicit assignment of a related unit is possible (eg. 2.5[*m*]).

[*mm*]$_{1011}$ **Implicit unit**. Implicit units are categorised semantically and denoted by a corresponding identity number (shown in green). Valid categories referring to the unit "length" are, for example, geodetic elevation, section length and thickness. The default unit for each category is defined by the currently active (design code specific) unit set. This input default can be overridden as described above. The specified unit in square brackets corresponds to the default for unit set `5` (Eurocodes, `NORM UNIT 5`).

Record	Items						
SYST	TYPE	GDIV	GDIR	FIX	XREF	YREF	ZREF

Table continued on next page.

Record	Items						
	T11	T21	T31	T12	T22	T32	T13
	T23	T33					
CTRL	OPT	VAL	V2	V3			
GRP	NO	REF	BASE	TITL			
NODE	NO	X	Y	Z	FIX	NR1	NR2
	NR3	NR4		DX	DY	DZ	PHIX
	PHIY	PHIZ	PHIG	DIV	PROG	SLN	SAR
EDGE	NO	TYPE	N1	N2	N3	...	N35
	N36						
KINE	ND	FIX	ND1	FD1	ND2	FD2	ND3
	FD3	ND4	FD4	ND5	FD5	ND6	FD6
	....	ND9	FD9				
GETN	X	Y	Z	VAR	IND		
TRUS	NO	NA	NE	NCS	PRE	DIV	NM
CABL	NO	NA	NE	NCS	PRE	DIV	NM
BEAM	NO	NA	NE	NCS	DIV	NM	AHIN
	EHIN	NP	BETY	BETZ	ALFY	ALFZ	KR
	DRX	DRY	DRZ	DROT	XA	YA	ZA
	XE	YE	ZE				
BSEC	X	NCS	SPEC	TYPM	TYPT	NO	
QUAD	NO	N1	N2	N3	N4	MNO	MRF
	NRA	POSI	T	T1	T2	T3	T4
	C	CT	KR	DRX	DRY	DRZ	DROT
	TX	TY	TXY	TD	M	N	M12
	M23	M34	M41				
BRIC	NO	N1	N2	N3	N4	N5	N6
	N7	N8	MNO	M	N	K	M12
	M23	M34	M41	M56	M67	M78	M85
	M15	M26	M37	M48			
SPRI	NO	NA	NE	DX	DY	DZ	CP
	CT	CM	PRE	GAP	CRAC	YIEL	MUE
	COH	DIL	GAPT	DP	DT	DM	EXPP
	EXPT	EXPM	MNO	AR	DIV	NM	NARE
	NERE	NMRE	KR	DRX	DRY	DRZ	DROT
BOUN	NA	NE	NM	TYPE	CA	CE	REF
	RX	RY	RZ	DIV	PROG	TITL	

Table continued on next page.

Record	Items						
ADDM	NO	TYPE	PER	NO1	NO2	P	
	UX	UY	UZ	UXX	UYY	UZZ	UW
MASS	NO	MX	MY	MZ	MXX	MYY	MZZ
	MXY	MXZ	MYZ	MB	REF	LC	PRZ
	SELE						
SBOX	A1X	A1Y	A1Z	B1X	B1Y	B1Z	A2X
	A2Y	A2Z	B2X	B2Y	B2Z	A3X	A3Y
	A3Z	B3X	B3Y	B3Z	R	T	
DEL	TYPE	FROM	TO	INC	XMIN	YMIN	ZMIN
	XMAX	YMAX	ZMAX				
MOD	TYPE	FROM	TO	INC	DNO	XMIN	YMIN
	ZMIN	XMAX	YMAX	ZMAX	FIX		
TRAN	TYPE	FROM	TO	INC	DNO	WIDE	XMIN
	YMIN	ZMIN	XMAX	YMAX	ZMAX	PROP	FIX
	DX	DY	DZ	PHIX	PHIY	PHIZ	ALPH
	BETA	THET	REFX	REFY	REFZ	FAKX	FAKY
	FAKZ						
EXTR	TYPE	FROM	TO	INC	PATH	V1	V2
	V3	DIV	SREF	OPT	SNAP		
LOFT	TYPE	IDSC	IDTG	REFS	REFT	DIV	OPT
MIRR	TYPE	FROM	TO	INC	DNO	WIDE	XMIN
	YMIN	ZMIN	XMAX	YMAX	ZMAX	PROP	FIX
	A	B	C	DIST	MP1	MP2	MP3
	FAC						
UMSH	TYPE	HMAX	PROG	SAR			
UBND	TYP	SEL	X	Y	Z	N1	...
	N32						
INTF	OPT	TYPE	REFT	NO	D	MNO	CP
	CT						
RSET	NO	SET	ITEM	UNIT	NO	NG	X
	NGS	TITL					
EXPO	OPT	TO	PASS				
IMPO	OPT	FROM	PASS				
ECHO	OPT	VAL					

3.6 Hints for Transition from GENF

As SOFIMSHA follows a completely new and much more powerful concept for the generation of data, we have the situation that simple input data may be converted easily, but that depending on the complexity of the definition a rather expensive redefinition might be necessary which is beyond the scope of any automatic conversion. In many cases the input with an old GENF-version and the following export with AQUA/SOFIMSHA might be the most economically way to do the transition.

Here following steps should be de noted or done:

- Add the now mandatory group divisor in record SYST
- Move all material and sectional definitions to AQUA
- Insert the item FIX for nodes of a planar system (there was no Z in GENF).
- Change of a few item names (e.g. KR instead of NR for BEAM)
- Sections for haunched beams have now to be defined as a single string in the form 10.11. There are some minor restrictions of this format for generations.
- Hinges of beams are defined with the beam itself. Beam sections are only defined with SECT.

For other cases the following hints might be helpful:

- Polar or spherical coordinates are defined with new special items. There is no longer the negative node number available for this effect.
- Generation of bodes along a line is dound with NODE instead of BOUN or MESH. MESH and CUBE have been integrated as QUAD MESH/IMSH and BRIC MESH/IMSH. IMES has to be described with a QUAD FIT/IFIT now.
- ALIN and SECT have been integrated in the record NODE. ALIN 101 100 102 0.5 becomes now NODE 101 0.5 NR1 100 102 "SS", and SECT 100 101 102 103 104 becomes NODE 100 NR1 101 102 103 104.
- All implicit element generators (ENO/DNO/KNO) have to be replaced either with CADINP loops or by MESH or FIT Options.

3.7 SYST – Global System Definition

SYST

Item	Description	Unit	Default
TYPE	The type of the system may be defined: 3D spatial structures 2D Plane frame or pannel 2DSS Plane stress 2DSN Plane strain 2DAX Axial symmetric system 2DSL Plane girder or plate bending 2DPS Prestressed plate system SECT sectional system REST Keep current system type INIT Delete the system, however, keep the system info This literal in combination with the GDIR defines the orientation of the coordinates. The former Literals (SPAC etc.) are still valid and are described in the remarks.	*LIT*	!
GDIV	Group divisor	–	0
GDIR	Direction of gravity POSX,POSY,POSZ NEGX,NEGY,NEGZ	*LIT*	*
FIX	Global default constraints	*LIT*	-

SYST defines the global parameters of the system. The record may be specified only once and has to precede any node, element or group definition. A definition of TYPE other than REST will delete the system information. With SYST REST it is possible to modify or extend an existing system. In general all results will be deleted in that case! Some exceptions are possible and may be controlled with CTRL REST.

The coordinate system is always a right-handed coordinate system. The origin should be within the system for numerical reasons.

There exist different conventions about the orientation of the coordinate axes. While the German Code (DIN 1080) proposes the z axis to be associated with the gravity direction, the international usage of coordinate systems often has a classical coordinate system with the z axis upwards. In 3D you may select your convention freely by selecting the gravity direction.

The global gravity direction is needed for the orientation of the local coordinate systems, special load types and boundary conditions as well as for the default orientation of all graphical output. By a cyclic permutation we obtain in the 3D space the first and the second horizontal axis:

GDIR POSZ / NEGZ:	X = first horizontal axis
	Y = second horizontal axis
GDIR POSX / NEGX:	Y = first horizontal axis
	Z = second horizontal axis
GDIR POSY / NEGY:	Z = first horizontal axis
	X = second horizontal axis

For axis symmetric systems only the gravity direction POSX/NEGX may be used which is also the rotational axis.

The recent system definitions are still supported, this is SPAC for 3D and some 2D variants distinguished by the view direction:

- **S**OFiSTiK **C**oordinate **S**ystem (z axis points in view direction):

  FRAM, PAIN, PESS, AXIA, GIRD and PGIR
- **W**orld **C**oordinate **S**ystem (z axis is opposed to view direction):

  WFRA, WPAI, WPES, WAXI, SLAB and PSLA

This differentiation becomes obsolete with the new input options; choice of general system type and gravity direction uniquely define the orientation of the coordinate axes:

		SCS = z axis in view dir. YX-plane (DIN 1080):		WCS = z axis opposed to view dir. Internat.-XY-plane	
2D	Plane frame	GDIR NEGX/POSY	(FRAM)	GDIR POSX/NEGY	(WFRA)
2DSN	Plane strain		(PAIN)		(WPAI)
2DSS	Plane stress		(PESS)		(WPES)
2DAX	Axial symm. system (X is rotation axis)	GDIR NEGX	(AXIA)	GDIR POSX	(WAXI)
2DSL	Girder / slab system	GDIR POSZ	(GIRD)	GDIR NEGZ	(SLAB)
2DPS	Prestr. plate system		(PGIR)		(PSLA)

In the case of planar structures only about half of the global unknowns are used such suppressing out-of-plane or in-plane-deformations and stress-resultants. Beams with principal axes not coinciding with the global reference system can be analyzed in three dimensions only.

For the description of sections as FE-systems there are three additional types of systems SECT for sections, which are not supported by SOFiPLUS so far:

- POSS — Y-Z-coordinate system of positive face (X-Axis against the view direction)
- NEGS — Y-Z-coordinate system of negative face (X-Axis anlog the view direction)
- SECT — any planar coordinate system

The group divisor is needed to separate the elements in groups. For further details see record GRP.

3.8 CTRL – Control of Analysis

CTRL

Item	Description	Unit	Default
OPT	A literal from the following list: NODE Automatic node numbers CONT Continuous beam information EXTR References for extrusion FIT Shortest Path factor GTOL Tolerance for coinciding nodes SNAP Tolerance for snapping nodes LOCA Local coordinate systems LOOP Generation process SUB No of subdomains PART Mesh-Partitioning features OPTI Renumbering optimisation REST Deletion of elemental loads and results	*LIT*	*
VAL	Value of control	–	-
V2	additional second control value	–	-
V3	additional third control value	–	-

The default or a user defined value of a CTRL parameter is maintained until it gets redefined. In case CTRL LOOP is used, the CTRL inputs are processed in loop mode.

NODE For all generations, automatic node numbers will start above this number. (Default 1000)

LOCA Definition of local coordinate systems of beams (Default=0)

- 0 local z in gravity direction or local y in first horizontal axis if not possible
  explicit orientation is specified for y-axis of beam
- 1 local z in gravity direction or local z in first horizontal axis if not possible
  explicit orientation is specified for z-axis of beam
- 2 local z in global Z or in global X if not possible or if beam axis in global Z
  explicit orientation is specified for z-axis of beam (IFC)
- 3 local z in global Z or in global Y if not possible or if beam axis in global Z
  explicit orientation is specified for y-axis of beam (GENF)

CONT An new span within a continuous beam sequence is started if one of the options selected with that option is encountered (default 15):

0	Specification of NREF in record GRP (always active)
1	The node numbers do not match
2	The nodal coordinates do not match
4	A support in gravity direction
8	Change of group number
16	Any support
64	allow duplicate beam numbers for continous beams (experimental)
128	Change of section number
256	Change of beam number
512	explicit new sequence starting with next beam

The value V2 defines the maximum allowed bend within a continuous beam in degrees. (Default is 45)

EXTR For an extrusion with TRAN / MIRR the new elements will receive a reference number from the original element according to the following rules:

0	The definition from the GRUP-Record is taken
1	The element number within the group
2	The element number (only possible if element number is < 262144).

FIT Factor by which the shortest path for a FIT may be longer than the direct connection. (Default 1.571)

0	deactivation (for a shorter CPU time)

OCTR Additional data in octree (nodes are always contained)

2	QUAD-elements
3	BRIC-elements

The OCTREE allows a fast finding of data especially for three dimensional structures. Currently the storage of elements is only useful for the generation of hanging nodes. It has to be noted that all elements defined when the command is given are copied to the octree and all elements defined there after will not be selectable in that case.

GTOL Tolerance for collapsing nearby nodes in [m].

SNAP Relative Tolerance [-] for snapping nodes within QUAD-Elements. See SPRI.

LOOP Generation process as it was in GENF (only for versions up to 2012). If CTRL LOOP is input, the generation is done in two loops:

1st loop:	only node generation (node definition with the records NODE and BOUN)
2nd loop:	generation of the elements

SUB With the setting of the SUB-value the domain decomposition on the defined mesh will be started. This might be used independent from the mesh definition, i.e. you can decompose an existing mesh.

PART Bit-pattern to control sub domain partitioning for an analysis with a parallel machine

0 = use PMETIS or KMETIS (SUB>8)
1 = use KMETIS for mesh partitioning
2 = use PMETIS for mesh partitioning
+16 = use Random Matching (RM)
+32 = use Heavy-Edge Matching (HEM)
+48 = use Sorted HEM (Default)
256 = use reordered nodal-Bisection
257 = use group definitions

OPTI Bit-pattern to control internal equation number reordering

0 = no reordering at all
1 = fast global reordering (default)
2 = best global reordering
3 = best local and global reordering
+8 optimize also for skyline
+16 use Metis-random Matching (RM)
+32 use Heavy-Edge Matching (HEM)
+48 use Sorted HEM (default)

For every solver an optimum sequence of equation numbers may be defined in the data base. The type of optimization should be adopted to the solver to be used. Improper settings may have adverse effects!

CTRL SOLV 1	option 10
CTRL SOLV 2	option 9 or 10
CTRL SOLV 3	any option, default is 49
STEU SOLV 4	no sequence required, so option 0 may be used
DOLFYN	no sequence required, so option 0 may be used

Option 2 (or 10 or 50 etc.) should not be used for systems disintegrating in several non connected parts!

REST Deletion of elemental loads and results

0 = deletes always
1 = deletes if new elements are generated
2 = deletes only if elements are deleted

Hint: As HYDRA and DOLFYN save their results in compact form in the sequence of the internal node numbers, results of these programs may not be used further after a restart in general.

3.9 GRP – Group Control

See also: SYST, BEAM, QUAD, BRIC, SPRI, TRUS, CABL

GRP

Item	Description	Unit	Default
NO	Group number or identifier	*–/LIT*	!
REF	Span, reference or sequence number	–	0
BASE	Base number for this group	–	*
ICS	Construction stage number of activation	–	-
ICE	Construction stage number of deactivation	–	-
TITL	Title of the group	*Lit*32	-

Elements in SOFiSTiK can be organized into groups. We thereby distinguish between primary groups, addressed by a number between 1 and 999 and secondary groups, which are identified by a string of maximum 4 literals (Text Lit*4). The optional reference number at REF can be set to identify elements within or on the same geometry. It will usually be set automatically by the mesh generator.

3.9.1 Primary Groups

The important primary group number (1 to 999) of an element is derived uniquely from the element number with two possibilities depending on the value of SYST GDIV.

- **GDIV > 0**

  The group number is the integer result of the division of the element number by the group divisor.

Example:	Group divisor	Element number	Group number
	1000	1	0 (none)
	1000	3569	3
	2000	3569	1
	5	3569	713

- **GDIV=0**

  All groups must be assigned an individual base number in increasing order. An element number within one of the intervals defines the membership to the respective group.

Example:	Group	Base	Element number
	0 (none)	0	1-99999
	1	100000	100001-199999
	2	200000	200001-249999
	3	250000	250001-259999

4	260000	from 260001

Attention: If no base has been selected, the first element defined within a group will define that value. Element numbers equal to the base number should be avoided, but are still allowed with GDIV 0.

- **GDIV < 0**

  The base values of all groups >0 will be defined after the generation of all elements based to be multiples of the GDIV value. As the base numbers are not used for an element number, it is no longer possible to use continuous element numbers with that case. All other features are as in the case GDIV=0. Current limit for elements within a group is set to 1 Million

The primary group 0 has a special historic context and should not be used for elements to be deactivated in the construction sequence. Especially it has to be noted, that kinematic constraints without a group number may not be deactivated.

For the specified element number we have the following procedures:

- not specified or given as 0 will select the next free number in the current group.
- If the first element number is above the base of the group, all element numbers will be mostly treated as final, i.e. will be corrected only if they do not match the group limits.
- In all other cases the given number not larger than 999 999 will be added to the base.

If no GRP record is defined or this state has been reestablished with a GRP * definition, the primary group number will be derived from the given element number. In all other cases the element numbers will be adjusted to fit within the specified primary group.

The maximum group number is 999 for both cases. The base number and designation of each group is identical for all type of elements. Large element numbers may be given as an offset to the base number for printing. It is recommended therefor to use base numbers only which are multiples of 100, 1000 or 10 000.

3.9.2 Secondary Groups

Contrary to primary groups, some elements can be assigned to multiple secondary groups. Secondary groups are available for:

- BEAM,TRUS and CABL-Elements
- SPRI-elements
- QUAD and BRIC-elements
- the nodes of these elements in the secondary group

A secondary group is defined by a leading GRP record, with the group identifier at NO consisting of maximum four characters (Text Lit*4), and following selection records. For selecting the elements within the secondary group, the following possibilities exist:

- Element records without an element number select all elements of that type.
- Element records with a single element number, or a pattern matching multiple numbers. Ranges of element numbers may be defined by two numbers, where the second number has a negative sign, thus 101,-109 will select all elements from 101 to 109. Patterns are literals where '?' matches any digit, '*' matches all digits to the left, 'E' matches any even digit and 'O' matches any odd digit.
- Element records, followed by the literal 'GRP' and a primary or secondary group ID. Multiple groups may be combined in one secondary group, by applying the following logical operations:

  'GRP' selection with option OR
  '&GRP' selection with option AND
  '!GRP' selection with option AND NOT
  '~GRP' selection with option NOT

– Option OR results in the union of the specified groups:

```
grp 'B1'
   quad 'grp' 'A1'
   quad 'grp' 'A2'
```

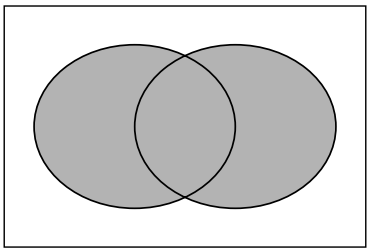

Figure 3.1: Elements in group A1 OR in group A2

– Option AND results in the intersection of the specified groups:

```
grp 'B2'
   quad 'grp' 'A1'
   quad '&grp' 'A2'
```

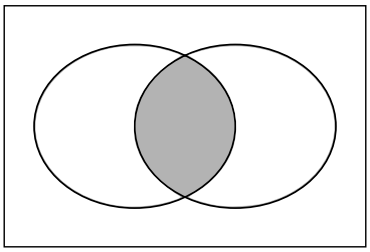

Figure 3.2: Elements in group A1 AND in group A2

– Option AND NOT results in the difference of the specified groups:

```
grp 'B3'
   quad 'grp' 'A1'
   quad '!grp' 'A2'
```

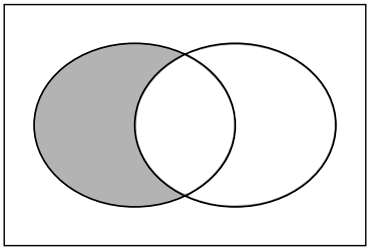

Figure 3.3: Elements in group A1 AND NOT in group A2

– Option NOT results in the complement of the specified groups:

```
grp 'B4'
   quad 'grp' 'A1'
   quad '~grp' 'A2'
```

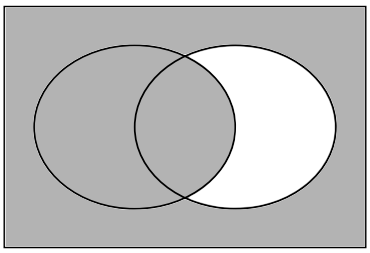

Figure 3.4: Elements in group A1 or NOT in group A2

- Selection of elements within a geometric body defined by SBOX: An element will be assigned to the secondary group if at least one of its nodes lies within the given volume. Multiple selection bodies can be given to further specify the selection. If records of element types are added, the selection is limited to those given types, if no such selection is made, all element types are addressed.
- Selection by element properties: By specifying one of the following special literals at the number, all elements having one of the further specified properties are selected:

  '==' elements having these properties
  '<>' elements not having these properties
  '>' elements having properties above the given values

'<' elements having properties below the given values

The following example creates a secondary group identified by 'GRS1' and assigns all quad elements with material number 1:

```
grp 'GRS1'
quad '==' mno 1
```

A preceding ampersand '&' changes the logical operation from "or" to "and", i.e. the first case will select elements having any of the specified selections, while the second will select only elements having all of the specified conditions of this type.

3.10 NODE – Nodes, Coordinates and Constraints

See also: SYST, TRAN, KINE

NODE

Item	Description	Unit	Default
NO	Node number	–/	!
	MESH/IMSH Generation	*LIT*	
	FIT/FITL Sequence of nodes		
	SBOX All within SBOX		
X	X-coordinate	$[m]_{1001}$	0
Y	Y-coordinate	$[m]_{1001}$	0
Z	Z-coordinate	$[m]_{1001}$	0
FIX	Node constraints	*Lit*16	*
NR1	Node number of reference node	–	-
NR2	Node number of second reference node	–	-
NR3	Node number of third reference node	–	-
NR4	Node number of fourth reference node	–	-
DX	Directions for kinematic constraints or	$[m]_{1001}$	*
DY	polar boundary conditions	$[m]_{1001}$	*
DZ		$[m]_{1001}$	*
PHIX	Rotation angles for polar or	$[\circ]_5$	0.0
PHIY	spherical coordinates	$[\circ]_5$	0.0
PHIZ		$[\circ]_5$	0.0
PHIG	Inclination for spherical coordinates	$[\circ]_5$	0.0
DIV	Subdivision for MESH / IMSH	–	-
PROG	Progression of subdivision	–	1.0
SLN	Projection on structural line / axis (GAX)	–/*Lit*4	-
SAR	Projection on structural area / area (GAR)	–/*Lit*4	-
RC	Radius of a sphere / cylinder	$[m]_{1001}$	-
XC	Center of the sphere /	$[m]_{1001}$	0.0
YC	Point on axis of cylinder	$[m]_{1001}$	0.0
ZC		$[m]_{1001}$	0.0
DXC	direction of cylinder axis	–	0.0
DYC		–	0.0
DZC		–	0.0

The nodes are those points defining a mechanical connection between elements. They are

addressed via unique node numbers which do not need to be in a consecutive order.

Coordinates or constraints of all the nodes can be defined multiple times as long as no elements have been defined. The last input is valid at any time. With a RESTART nodes or boundary conditions may be added or changed. If only the constraints or certain coordinates are to be modified, then only those values should be defined. This feature will allow the use of different reference nodes.

During the mesh generation nodes will be created automatically. If the user wants to have a special node with a fixed number at a certain location, he has to define that node explicitly before generating the mesh.

3.10.1 Coordinates

The user can choose among three coordinate systems for the input:

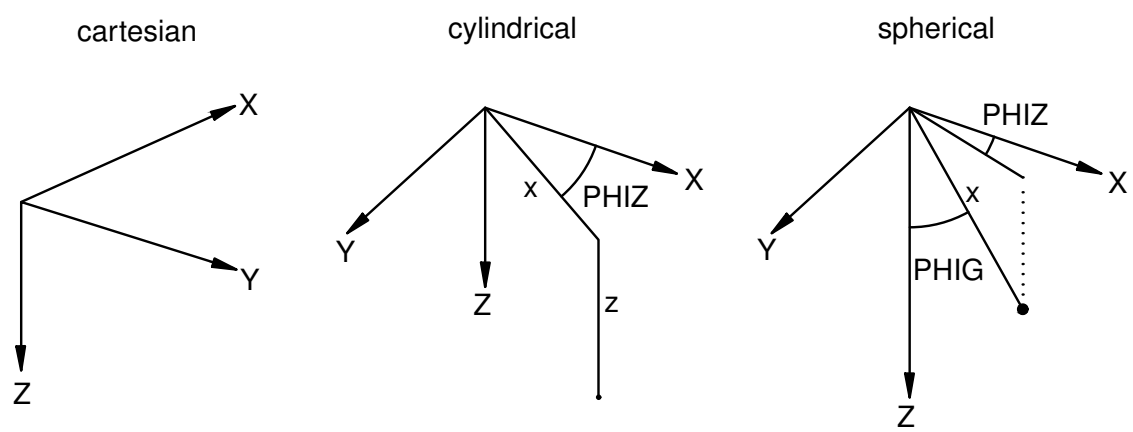

Figure 3.5: Coordinate Systems

For the spherical coordinates (X,PHIZ,PHIG) the angle PHIG is evaluated in advance as the angle between the gravity direction and the radius of the sphere. The angles PHIX to PHIZ define the rotations about the global coordinate axis. If more than one angle is defined, the transformation matrix used is that of the simultaneous incremental rotation (see Theoretical Principles). The definition of PHIG NORM a normalization based on the tangent values is selected which is easier to use in most cases.

If only **one** reference node is defined, all coordinates are considered to be relative to this reference node. A node should not be defined relative to itself.

If **two** or **three** reference nodes are given, the new node will be on the line defined by the first two points. Depending on the definition of coordinates there will be different projection rules applied. In the case of two reference nodes the coordinates are taken as absolute, in the case of three coordinates, they are taken relative to the third node NR3:

- If only one coordinate is given, the node will be on the line with that absolute or refered to NR3 coordinate value. (X 0.0 with NR3 is thus equivalent to the REF XX in ALIN of GENF)
- In case of two defined coordinates, the point NR3 as well as the straight line NR1-NR2 are projected onto the respective plane of the two defined coordinates. In this plane the perpendicular point from the projection of NR3 is then calculated onto the projected line.

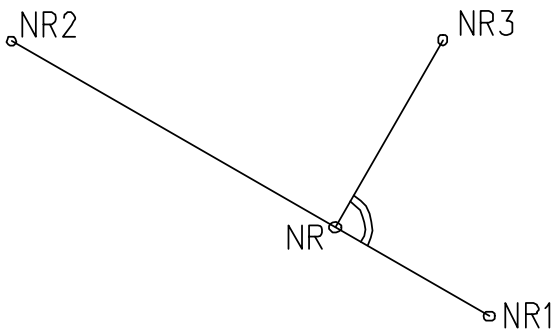

Figure 3.6: Two or three Reference Nodes

The point NO lies exactly on the connecting line, having the same projection in the direction of the missing coordinate onto this perpendicular point.

- If there are three coordinates given or only the third reference NR3, then the projection is perpendicular in space on the line between those two nodes.
- The definition of a literals S or SS at position NR3 will take the X-value as an absolute (S) or relative (SS) measure along the line from NR1 to NR2.
- The definition of a literal PERP at position NR3 will create the new node as a projection of (x,y,z) on a plane perpendicular to NR1-NR2 at point NR1. Thus (x,y,z), NR, NR1 and NR2 are coplanar.

The base of the projection may be also given as a NR1 FIT *node1 node2*, the definitions to NR3 are then given with item NR4.

If **four** references are given, the node is the intersection of the lines NR1-NR2 and NR3-NR4 or the point with the smallest distance on NR1-NR2 if the lines are skewed in three dimensions.

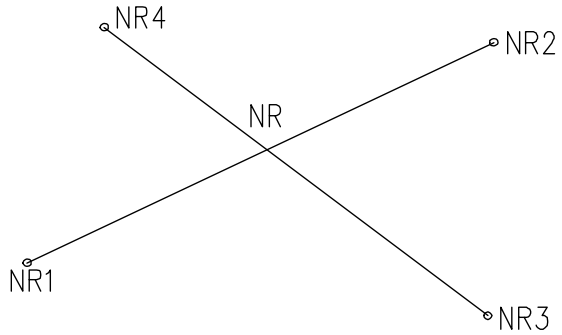

Figure 3.7: Four References

As it is impossible to define kinematic constraints for a reference node and absolute coordinates in the same record, it is advantageous to define first all the nodal coordinates and subsequently all the support conditions and kinematic constraints (then without coordinates) in a separate record.

There is also the possibility to project the coordinates on to a general surface or axis. Similar to the option of the hanging nodes, this may be specified as one time option with the nodal definition or with **NODE PROP** as a default for all following direct or generated node definitions. The default will remain active until a new **NODE PROP** record is defined. As projection targets we have all lines and areas defined with SOFIMSHC (Items **SLN** and **SAR**), as well as explicit definitions of a sphere (**R,XC,YC,ZC**) or a cylinder. This is also intended to add manually

elements after an automatic mesh generation from SOFIMSHC.

3.10.2 Nodal generations (MESH and IMSH)

Nodes may be generated with the following possibilities:

- Definition of literal MESH at position NO for a generation with automatic node numbers not yet used. All generated nodes are compared against already existent nodes and created only if necessary (see CTRL FIT).
- Definition of literal IMSH at position NO for a generation with interpolated node numbers. All nodes already defined within the selected sequence are retained, the interpolation will be in between those nodes only.

In both cases the following positions X and Y are used to specify two node numbers NA and NE. The number of subdivisions may be specified with DIV either as integer value n or as real factor 1/N. For IMSH it is also possible to specify at position Z an increment:

```
NODE IMSH 101 181 10                    generates 111,121 .. 171
NODE IMSH 101 181 DIV 8                  dito
NODE IMSH 101 181 DIV 1/8        dito
```

At position Z a third node NM may be specified for MESH to define curved edges:

- a positive number NM generates quadratic interpolated nodes based on the geometry defined by the three nodes NA, NM, NE. Node NM does not need to coincide with one of the final generated nodes.
- a negative value NM generates circular interpolated nodes based on the geometry defined by the three nodes NA, NM, NE. Node NM does not need to coincide with one of the final generated nodes.

With PROG one can define edges with a subdivision as geometric progressions. Starting at NA, each segment is PROG times the previous one. If PROG is negative, a symmetric partitioning takes place (length of the first segment equal to that of the last one).

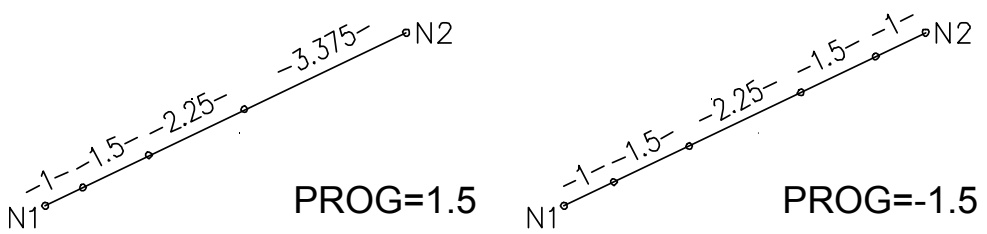

Figure 3.8: Geometric Progression

For the reference nodes it is possible to specify starting at item NR1 the definitions FIT *k1 k2* or MESH/IMSH *k1 k2 km*. The divisions have to match of course.

3.10.3 Nodal sequences (FIT)

Any Generation of nodes according to the preceding paragraph will save the list of generated node numbers to be reused for other generations. However it is also possible to generate a sequence of existing node numbers. Thus we have the following possibilities:

- a literal FIT for NO will search for an already defined nodal sequence between start and end node. If a node sequence is found with a geometric length not longer than a certain threshold value of the direct connection (CTRL FIT) this will be used and DIV will be set to the subdivision found.
- a literal FITL will search for all nodes which are located within the tolerance specified with CTRL GTOL on the straight line between start and end node, sort them according to their relative distance and create a FIT from that, thus also defining the default value of DIV.

Again in both cases the following positions X and Y are used to specify two node numbers NA and NE.

For the generation of elements, it is also possible to generate nodes or nodal fits onn the fly automatically. This has to be defined with the number of subdivision segments DIV or M and N for QUAD or M and N and K for BRIC and optional mid nodes NMi.

3.10.4 Support Conditions

Supports of a node can be described by any combination of the following literals (maximum of 16 characters). Any degree of freedom not included in a 2-D system gets fixed automatically. The default constraint is the value defined by FIXS in SYST. Elastic supports or support conditions along an edge may be defined also via the record BOUN.

PX	Constraint of displacement in x
PY	Constraint of displacement in y
PZ	Constraint of displacement in z
PR	Skewed constraint of displacement in a direction
PT	skewed constraint of displacements perpendicular to a direction
MX	Constraint of rotation about x
MY	Constraint of rotation about y
MZ	Constraint of rotation about z
MR	Skewed constraint of rotation about a direction
MT	Skewed constraint of rotation perpendicular to a direction
MB	Constraint of warping
XP	= PY + PZ
YP	= PX + PZ
ZP	= PX + PY
PP	= PX + PY + PZ
XM	= MY + MZ
YM	= MX + MZ
ZM	= MX + MY
MM	= MX + MY + MZ
FREE	= Deletion of all constraints
F	= PP + MM + MB

A boundary condition on a symmetry or an anti-symmetry axis can be defined with PRMT or

PTMR, respectively, if the direction of the kinematic constraint is defined perpendicular to the axis. Thus a direction must be defined in case of PR, PT, MR, MT by means of DX, DY, DZ or the reference node. A coupling to another node is not generated for these supports.

Support conditions and couplings may be added and subtracted at will. Subtraction is defined by a preceding minus character. Thus the following definitions are all equivalent:

```
NODE 101 FIX PX,PY
NODE 101 FIX PXPY
NODE 101 FIX ZP
NODE 101 FIX PP,-PZ
NODE 101 FIX PT DZ 1.0
NODE 101 FIX PP ; 101 FIX -PR DZ 1.0
```

3.10.5 Kinematic Constraints

Support conditions can also be defined in relation to another node (reference node). Coupling conditions describe infinitely stiff elements and special boundary conditions, which are numerically stable. They are used for the formulation of boundary conditions for plates and shells and the modeling of very stiff structural parts. General coupling conditions can be defined using the record KINE.

The following inputs are therefore only allowed in conjunction with the parameter NR1 in most cases. Combinations with other types of literals are not allowed. All constraints will have a group assigned to, but there are special rules described at the end of this paragraph. The formulas of the kinematic constraints are mostly given as the depending degree of freedom on the left side of the equation sign, while the referenced degrees are on the right side. The index 0 is always a degree of the reference node.

Coupling conditions, as linear relations, can not be used for any non-linear geometric analysis (they can not describe 2nd or 3rd order theory effects).

Remark: For clarity, please specify kinematic constraints in a separate statement after definition of the nodal position, e.g.,

```
NODE 101 X 10.0 0.0 0.0
NODE 101 FIX KPPX NR1 1001
```

instead of

```
NODE 101 X 10.0 0.0 0.0 FIX KPPX NR1 1001
```

For the latter input, already the nodal position of node 101 is defined relative to the reference node 1001.

KPX0 explicit kinematic constraint of x-displacement only ($u_x = u_{xo}$)
KPY0 explicit kinematic constraint of y-displacement only ($u_y = u_{yo}$)
KPZ0 explicit kinematic constraint of z-displacement only ($u_z = u_{zo}$)

Attention: The constraints KPX0, KPY0, KPZ0 may violate the global equilibrium of moments if they are used to connect transverse shear. There will be a warning if the distance of the coupled nodes will allow that mechanism. These constraints will NOT be combined with others.

KPPX	Connection of x displacement only (see formula 1)
KPPY	Connection of y displacement only (see formula 2)
KPPZ	Connection of z displacement only (see formula 3)
KMX	Kinematic constraint of rotation about the x-axis ($\varphi_x = \varphi_{xo}$)
KMY	Kinematic constraint of rotation about the y-axis ($\varphi_y = \varphi_{yo}$)
KMZ	Kinematic constraint of rotation about the z-axis ($\varphi_z = \varphi_{zo}$)
KMM	KMX + KMY + KMZ
KPR	Skewed kinematic constraint of displacement in a direction
KPT	Skewed kinematic constraint of displacements transverse to direction
KMR	Skewed kinematic constraint of rotation about a direction
KMT	Skewed kinematic constraint of rotations transverse to a direction

Only for the literals above a definition without NR1 is possible to define a support in a node.

KP	Hinged connection to rigid body at the reference node
KPEX	Rotation about x-axis only (see formula 7 to 8)
KPEY	Rotation about y-axis only (see formula 10 to 11)
KPEZ	Rotation about z-axis only (see formula 13 to 14)
	(e.g. flexible slab, rigid disk)
KL	= KP + KMT
KQ	= KP + KMR
KF	Fixed connection to rigid body at the reference node
KFEX	Rotation about x-axis only (see formula 7 to 9)
KFEY	Rotation about y-axis only (see formula 10 to 12)
KFEZ	Rotation about z-axis only (see formula 13 to 15)

Independant Constraints (see also remarks for KINE).

SYM	Symmetry conditions about the mid-perpendicular
ANTI	Anti-symmetry conditions about the mid-perpendicular
CYCL	Cyclic symmetry conditions

Kinematic conditions of the different constraints

KPPX:
$$u_x = u_{xo} + \varphi_{yo} \cdot (z - z_o) - \varphi_{zo} \cdot (y - y_o) \tag{3.1}$$

KPPY:
$$u_y = u_{yo} + \varphi_{zo} \cdot (x - x_o) - \varphi_{xo} \cdot (z - z_o) \tag{3.2}$$

KPPZ:
$$u_z = u_{zo} + \varphi_{xo} \cdot (y - y_o) - \varphi_{yo} \cdot (x - x_o) \tag{3.3}$$

KP:
$$KPPX + KPPY + KPPZ$$

KF

$$KP + \varphi_x = \varphi_{xo} \tag{3.4}$$
$$\varphi_y = \varphi_{yo} \tag{3.5}$$
$$\varphi_z = \varphi_{zo} \tag{3.6}$$

KPEX:

$$u_y = u_{yo} - \varphi_{xo} \cdot (z - z_o) \tag{3.7}$$
$$u_z = u_{zo} + \varphi_{xo} \cdot (y - y_o) \tag{3.8}$$

KFEX:

$$KPEX + \varphi_x = \varphi_{xo} \tag{3.9}$$

KPEY:

$$u_x = u_{xo} + \varphi_{yo} \cdot (z - z_o) \tag{3.10}$$
$$u_z = u_{zo} - \varphi_{yo} \cdot (x - x_o) \tag{3.11}$$

KFEY:

$$KPEY + \varphi_y = \varphi_{yo} \tag{3.12}$$

KPEZ:

$$u_x = u_{xo} - \varphi_{zo} \cdot (y - y_o) \tag{3.13}$$
$$u_y = u_{yo} + \varphi_{zo} \cdot (x - x_o) \tag{3.14}$$

KFEZ:

$$KPEZ + \varphi_z = \varphi_{zo} \tag{3.15}$$

The conditions PR and PT, KPR and KPT as well as their counterparts for moments are not explicitly but implicitly defined. The programs themselves create an appropriate explicit form.

PR:

$$\underline{u}^t \cdot \underline{n} = 0$$
$$u_x \cdot dx + u_y \cdot dy + u_z \cdot dz = 0 \tag{3.16}$$

PT:

$$\underline{u} \cdot \underline{n} = 0$$
$$\frac{u_x}{d_x} = \frac{u_y}{d_y} = \frac{u_z}{d_z} \tag{3.17}$$

KPR:

$$(\underline{u} - \underline{u}_o)^t \cdot \underline{n} = 0$$
$$(u_x - u_{xo}) \cdot dx + (u_y - u_{yo}) \cdot dy + (u_z - u_{zo}) \cdot dz = 0 \tag{3.18}$$

KPT:

$$(\underline{u} - \underline{u}_o) \cdot \underline{n} = 0$$
$$\frac{(u_x - u_{xo})}{d_x} = \frac{(u_y - u_{yo})}{d_y} = \frac{(u_z - u_{zo})}{d_z} \tag{3.19}$$

The symmetry and anti-symmetry conditions are given in the following equations in vector

notation. A presentation of their components is not included here:

SYM: $\underline{u}^t \cdot \underline{n} = -\underline{u}^t{}_o \cdot \underline{n}$

ANTI: $\underline{u}^t \cdot \underline{n} = \underline{u}^t{}_o \cdot \underline{n}$

The directional or differential vector n = (dx,dy,dz) is built from the differences of the node coordinates. These coordinate differences can also be specified explicitly by means of DX, DY and DZ.

All constraints will have a group assigned to. This will allow to deactivate or activate those constraints the same way as the elements within the analysis programs. However, there are some special rules to obey:

- For compatibility reasons, the group Zero will be always active, respective the constraints are active if they connect to an active element within the current group selection.
- It is not possible to cheat and to build closed-loops or multiple definitions of constraints by using different group numbers.

Certain degrees of freedom, that have been defined as constrained, can be supported again with the input of a support condition. The constraint will then become ineffective. An inversion of constraints with this method is definitely not possible.

If for the selection of nodes a sequence of nodes has been created or referenced, an input of FIT at NR1 may be used to select an existing FIT between the nodes NR2 and NR3.

3.10.6 Hanging nodes

In case of mesh refinements, anchor points or in cases of stiff cross-girders there may arise a need for nodes that lie between others and depend on them. A rather general interpolation is available with KINE **INTE**, simpler cases may be defined with an explicit constraints INT? and special reference literals **QGRP**/**BGRP**.

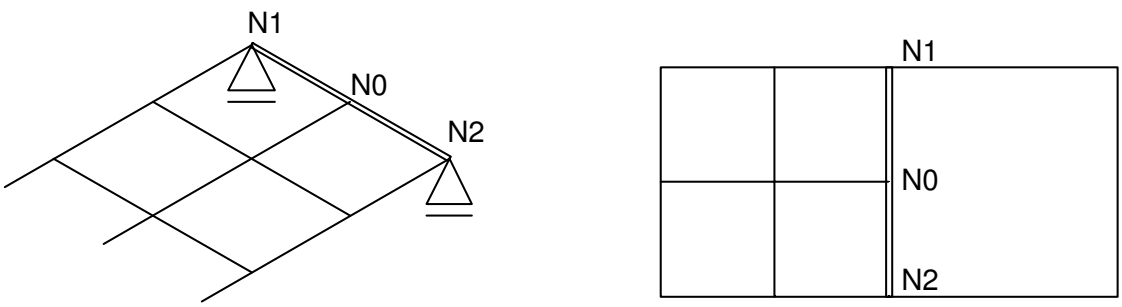

Figure 3.9: INTE-couplings

The INTE-coupling is a constraint with special attributes (see also remarks for KINE). Herein, opposite to node couplings, one node (the middle node) becomes dependent on two other nodes. The displacements and rotations of the middle node are interpolated from the corresponding ones of the adjacent nodes. Thus no artificial stiffness is introduced in the system. A more general formulation may be obtained via KINE. A rigid body with three nodes must be described by means of two KP/KF couplings; the INTE-coupling can not be used in that case.

$$u_0 = u_1 \cdot DD + u_2 \cdot (1 - DD)$$

There are several variants of interpolation used by INTE-couplings, which are described in the following. The constraint may be also used with three or four reference nodes.

INTE

Displacements:	linearly interpolated
Rotations:	not defined
Application:	mesh refinements TALPA

INTF

Displacements:	linearly interpolated as in TYPE P
Rotations:	”torsion” linearly interpolated, other rotations com- puted from displacement differences divided by the respective node distances
Application:	connection of beam elements onto disks stiff cross-girders between two supports

In the general three-dimensional case, if one draws the lines connecting the two nodes in the initial undeformed as well as in their deformed state, two rotational components are defined exactly by the secant angles of those. The third yet undetermined rotational component has the direction of the connecting line (torsion), and it is normally interpolated. The general expression is very complicated; however, INTE-couplings parallel to the axes of coordinates can be expressed by much simpler expressions, e.g.,

$$X = 0.$$
$$Y = d$$
$$Z = 0.$$

results in:

$$\varphi_x = \Delta u_z / d$$
$$\varphi_y = \varphi_y - m$$
$$\varphi_z = -\Delta u_x / d$$

INTS

Displacements:	quadratically interpolated
Rotations:	linearly interpolated
Application:	mesh refinements of plates and shells

In mesh refinements of plates and shells there is a problem in coupling the translational and rotational degrees of freedom. Very poor elements function with a plain interpolation. Due to the peculiarities exhibited by the formulation of the SEPP/ASE-elements, even in its simplest form, the INTE-conditions must be accordingly complicated. In case of regular elements by Kirchhoff’s theory for example, a cubic interpolation of the displacements and two of the rotations must be employed. Mindlin elements also work with the so-called Kirchhoff constraints. In principle of course, translations and rotations are interpolated independently of one another,

yet proper additional conditions are used to make sure that the shear force corresponds to the derivative of the moment.

A quadratic distribution of the bending deflection along with a linear distribution of the rotations can be accomplished through the introduction of an additional translational degree of freedom at the middle of an element's side. This additional degree of freedom can be later eliminated. This method is also employed by V-couplings. Although the formulation is consistent and leads to considerably better results than the older methods, it is not recommended unlimited. In particular, it should not be used with non-conforming elements.

The application of INTE in the direct vicinity of singularities is generally not recommended.

For the coupling of independent meshes a special input with **NR1** as **QGRP** and **NR2** as *nn*, the QUAD elements of the group *nn* will be scanned for a matching element. With the literals **QGRX**, **QGRY** and **QGRZ** the search for the elements will ignore the specified global coordinate. Similar the definition of NR1 BGRP creates the constraints for a node within a BRIC-element belonging to group NR2. In those cases it is also possible to select the degrees to be interpolated with **FIX**. If this option is given without a node number or with NODE PROP it will become effective for all following generation of nodes with NODE, TRAN, MIRR or any other mesh generation until an explicit NODE PROP or single NODE FIX FREE is given. The selection of elements may be faster by using the CTRL OCTR command.

3.10.7 Equivalent stress transformations (EST)

ESTL stress transformation for linear edges
ESTA stress transformation for areas

A very general technique for the connection of different element types has been published by Werkle 2002 with the concept of an "'equivalent stress transformation"'. The basic idea is easy to describe.

A reduced system defines a stress distribution e.g. with a cross section. The stresses induced by a single force or moment will be applied to the finite element mesh. The calculated nodal forces will define a special constraint of the beam or support node referenced on the nodes of the FEM mesh.

The transverse forces as well as the torsional and warping moments may be distributed either by the shear stresses of a section or as the mean values of all deformations or the polar rotations. This will be controlled by an additional option to be added to the section number NO1:

0	Search QUAD elements within the support area
1000	As 0, including unit warping and shear stress distributions
2000	Search edges of QUAD elements within the support area
3000	As 2000 including unit warping and shear stress distributions
+4000	Reverse the sign of warping

Options 0 and 1000 are applicable for aal section types (thin-walled, solid or FEM). Options 2000 and 3000 will analyse an internal thin-walled section if a section is not defined. Thus, they are also applicable for openings and will be used if 0/1000 has no element match.

The support node should not be part of the FE-mesh. This can be achieved by a definition of two nodes at the same location where the support node has a higher number. SOFIMSHC provides the option XFLG PLA for a SPT.

But it may be supported. The kinematic constraints will be rearranged accordingly. This yields a smoothing of the moments due to the distributed support stresses.

The support area is either described by a section number at item NR1 and a tolerance DZ or an explicit definition with items DX, DY and DZ. Two of these values define a rectangular area, a single value defines a circular area with a diameter perpendicular to that direction.

Depending on the section definition the sections will be aligned with the elastic centre or the origin of the sectional coordinate system at the specified beam node.

The orientation of the sectional coordinate system is given by the local coordinate system of the structural point NO (local z in beam direction, local x-y in y-z of the section) or the defined global dimensions and the orientation of the gravity direction to align the beam axis in the gravity direction. A rotation around the sectional x-axis may be specified at item NR2 in degrees.

In both cases at item NR3 a primary or secondary group number may be specified to select the QUAD elements of the transformation.

The EST transformation will be compiled to explicit kinematic conditions.

3.11 EDGE – Edge Definition

See also: SPRI, FLEX, GRP, NODE

EDGE

Item	Description	Unit	Default
NO	Edge number or identifier	$-/Lit4$	!
TYPE	Selectiontyp of intermediate nodes NONE / FIT / FITL	LIT	-
N1	first node number	–	-
N2	second node number	–	-
N3	third node number	–	-
...			
N36	36th node number	–	-

This record allows the definition of edges, to be used for generations and boundary conditions. The created information in the database contains only a list of nodes along the edge, no other data. More than one record with the same edge number may be defined. Edges with a literal as identifier are primarily intended for boundary conditions and loading.

SOFIMSHC resp. SOFiPLUS will generate an EDGE with the same number for every structural line used for mesh generation. To simplify the input of regular numbers it is possible to combine two entries of the list to a range with a negative element. A sequence of 101 -191 selects all defined nodes within that intervall, e.g. 101,111,121,...,191.

3.12 KINE – Kinematic Dependencies

See also: NODE

KINE

Item	Description	Unit	Default
ND	Dependant node number	–	!
FIX	Dependent degrees of freedom	*Lit*16	!
ND1	Reference degree of freedom 1	*LIT*	-
FD1	Factor for reference degree of freedom 1	–	-
ND2		–	-
FD2		–	-
...			
...			
ND21		–	-
FD21		–	-

In general cases kinematic dependencies can also be defined explicitly:

$$(ND) = (ND1) \cdot FD1 + ... + (ND21) \cdot FD21$$

The dependent degrees of freedom are selected with a node number ND + a support condition literal FIX, which may also contain multiple degrees of freedom. The reference degrees of freedom are defined by:

node number + 0.1 · local degree of freedom

$1 = u_x \quad 2 = u_y \quad 3 = u_z$

$4 = \varphi_x \quad 5 = \varphi_y \quad 6 = \varphi_z \quad 7 = \varphi_b$

0 = same or corresponding degrees of freedom as FIX

e.g the record

```
KINE  100 PZ  1.3  1.0  2.5  0.5
KINE  200 PP  201  0.5  202  0.5
```

defines the displacement $u_z$of node 100 is defined as the sum of the displacement u_z of node 1 and one-half of the rotation φ_y of node 2. Further all three displacements of the nodes 200 will be obtained by the mean value of the corresponding values at nodes 201 and 202 (i.e. 200 is a hanging node)

If the dependent degree is defined as INTE, constraints are defined to allow the distribution of a loading of forces and moments on the dependent node as forces on the reference nodes. This can be used to define a mass on several points of the structure. If only selected degrees should be used, these degrees may be appended with a "':"' (eg. INTE:PXPYMZ)

The factors of the dependent nodes are taken as weight functions W_i, defaulting to 1.0 in general.

The kinematic constraints are derived from the distribution of forces and moments in the dependent point a:

$$F_i = F_a \cdot \frac{W_i}{\sum W_i} \tag{3.20}$$

$$F_i = M_a \cdot \frac{W_i \cdot r_i}{\sum W_i \cdot r_i^2} \tag{3.21}$$

For the warping degree the following condition is assumed:

$$F_x = M_b \cdot \Delta y \cdot \Delta z \tag{3.22}$$

If a positive number is entered for ND, then the same kinematic constraint also applies to the reaction forces. Therefore, no reaction forces arise at coupled nodes. If ND is negative, however, the kinematic constraint applies to the displacements only. Rigid bodies are typical cases of the first variant, oblique supports are typical of the second one.

More than 21 degrees of freedom may be defined recursively by means of one or more of the NDi being constraints depending on other degrees.

Each degree of freedom is allowed to have at most one such definition. This can be accomplished with appropriate group definitions. While the constraints defined with NODE are mostly combined automatically, it is the responsibility of the user to assure valid definitions when combining KINE or INTE constraints avoiding duplicate definitions.

3.13 GETN – Enquire node or element number

GETN

Item	Description	Unit	Default
X	Coordinates	$[m]_{1001}$	0.0
Y		$[m]_{1001}$	0.0
Z		$[m]_{1001}$	0.0
VAR	Name of a CADINP variable (without the # character of course !)	$Lit8$	!
IND	base index of the variable	–	-
TOL	Tolerance for the search	$[m]_{1001}$	*
TYP	Object type NODE Nodes QUAD QUAD elements BRIC BRIC elements	–	NODE
GRP	primary group number for QUAD/BRIC	–	-

This record is intended for special cases where it might become necessary to identify generated nodes or Elements. The input for this record are the coordinates and SOFiMSHA will then scan the list of objects for a match.

For TYPE NODE the list of the node numbers within the tolerance arround (X,Y,Z) will be saved to the specified CADINP variable array. If the tolerance is specified with a negative entry only the closest node number will be saved to the variable.

For TYPE QUAD or BRIC only the first element with the point (x,y,z) within the element is taken. Overlapping elements hae to b treated with definition of a primary positive group number at GRP. The following entries are the four/eight node numbers and then the corresponding values of the shape functions for these nodes.

If the coordinates of a node are needed in the input, they may be obtained in nearly all programs with the special CADINP variables.

#COOR_X(*nummer*)

#COOR_Y(*nummer*)

#COOR_Z(*nummer*)

As in SOFIMSHA the coordinates will be generated only after having read all input data, it might be necessary to use a restart with SYST REST.

3.14 TRUS – Truss Elements

See also: CABL, BEAM, GRP

TRUS

Item	Description	Unit	Default
NO	Number of truss member or option	–	*
	PROP Definition of default values		
	MESH Generation of nodes		
	IMSH Generation of nodes		
	FIT Fit in existing nodes		
	FITL Linear Fit in existing Nodes		
NA	Start node	–	!
NE	End node	–	!
NCS	Cross section number	–	1.
PRE	Prestress force	$[kN]_{1101}$	0.
GAP	gap of contact	$[m]_{1001}$	0.
CRAC	Tensile rupture force	$[kN]_{1101}$	-
YIEL	Yield force (tension and compression)	$[kN]_{1101}$	-
DIV	Subdivision in Elements	–	-
NM	optional 3rd subdivision node	–	-
	(see comments in record NODE)		

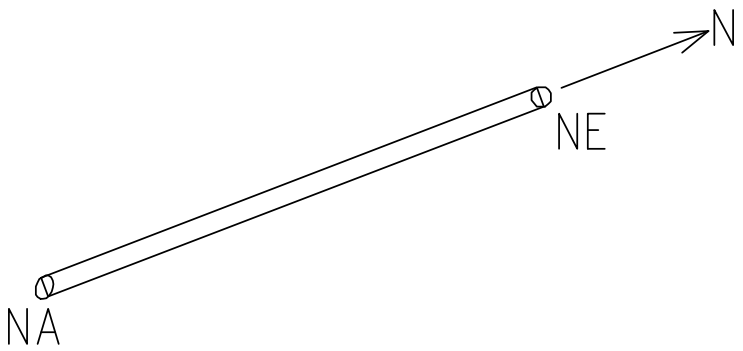

Figure 3.10: Truss member

A truss element can only sustain tensile or compressive forces. Truss elements can not be processed with SYST GIRD/SLAB. Definitions of GAP, CRAC or YIEL will become effective only within a non linear analysis, the user has to check if the used version of the analysis program includes this feature already.

The prestress is active in all load cases, thus in general it can not be used for load superpositioning with the program MAXIMA. In these cases it is thus better to define it as a load.

A uniform partitioning can be defined with DIV and NM. For more details see the node section of chapter NODE

With the input of the literal PROP for NO it is possible to define values, becoming default for following records and especially for the Import. With the input for instance

```
TRUS PROP NCS 1
```

the cross section number is defined with 1 for all following TRUS records.

When defining after PROP (at item NA) an element number, all properties will be preset to those of that element in the current import source data base (IMPO).

3.15 CABL – Cable Elements

See also: TRUS, BEAM, GRP

CABL

Item	Description	Unit	Default
NO	Number of cable element or option	–	!
	PROP Definition of default values		
	MESH Generation of nodes		
	IMSH Generation of nodes		
	FIT Fit in existing nodes		
	FITL Linear Fit in existing Nodest		
NA	Start node	–	!
NE	End node	–	!
NCS	Cross section number	–	1.
PRE	Prestress force	$[kN]_{1101}$	0.
GAP	gap of contact	$[m]_{1001}$	0.
CRAC	Tensile rupture force	$[kN]_{1101}$	-
YIEL	Yield force	$[kN]_{1101}$	-
DIV	Subdivision in Elements	–	-
NM	optional 3rd subdivision node	–	-
	(see comments in record NODE)		

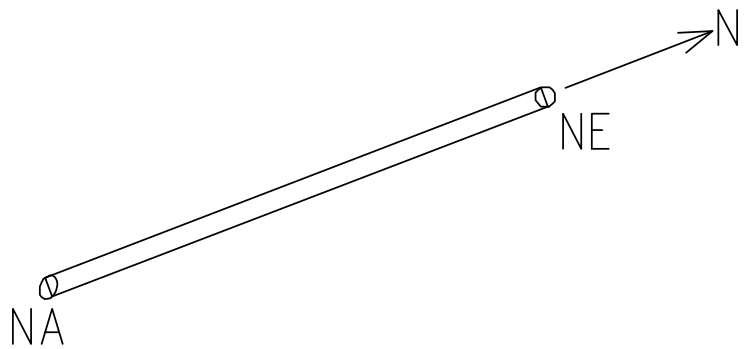

Figure 3.11: Cable element

However, during linear-elastic analysis cable elements behave as truss elements receiving tensile as well as compressive forces. By definition, Eigenvalue analysis also imply linear-elastic behavior. For the consideration of non-linear effects such as cable-sag or tension-only behavior the respective non-linear procedures within ASE must be used. However, the geometric stiffness due to the prestress is taken into consideration. Cable elements can not be processed with SYST GIRD/SLAB. Definitions of GAP, CRAC or YIEL will become effective only within a non linear analysis, the user has to check if the used version of the analysis program includes this feature already.

The prestress is active in all load cases, thus in general it can not be used for load superpositioning with the program MAXIMA. In these cases it is thus better to define it as a load.

A uniform partitioning can be defined with DIV and NM. For more details see the node section of chapter NODE

With the input of the literal PROP for NO it is possible to define values, becoming default for following records and especially for the Import. With the input for instance

```
CABL PROP NCS 1
```

the cross section number is defined with 1 for all following CABL records.

When defining after PROP (at item NA) an element number, all properties will be preset to those of that element in the current import source data base (IMPO).

3.16 BEAM – Beam Elements

See also: BSEC, GRP, BOUN

BEAM

Item	Description	Unit	Default
NO	Element number or option	–/*LIT*	*
NA	Number of start beam node	–	!
NE	Number of end beam node	–	!
NCS	Cross section number or two section numbers (start.end) or a formula with a preceeding '='	–	1
DIV	Equal partitioning of beam	–	-
NM	optional 3rd subdivision node (see NODE)	–	-
AHIN	Hinge condition or work law at beam start	*LIT*	-
EHIN	Hinge condition or work law at beam end	*LIT*	-
NP	Number of a bedding profile or a reference axis for an eccentrical beam		
BETY	Buckling length coeff. (main bending)	–	0
BETZ	Buckling length coeff. (transverse)	–	BETY
ALFY	Span length coeff. (main bending)	–	-
ALFZ	Span length coeff. (transverse)	–	ALFY
KR	Orientation of local coordinates	*LIT*/–	0
DRX	Direction vector	–	*
DRY		–	*
DRZ		–	*
DROT	Additional rotation about beam axis	*degree*	0
XA	Eccentricity of start of beam	$[m]_{1001}$	0
YA	in global coordinates	$[m]_{1001}$	0
ZA	referenced to the start node	$[m]_{1001}$	0
XE	Eccentricity of end of beam	$[m]_{1001}$	0
YE	in global coordinates	$[m]_{1001}$	0
ZE	referenced to the end node	$[m]_{1001}$	0

A beam element is defined by two nodes and a cross sectional description. Records of type BSEC can be used to describe any desired variation of the cross section. A uniform partitioning can be defined with DIV. With the definition of a literal MESH/IMSH/FIT/FITL for NO, individual beam elements will be created (see also NODE, CTRL FIT. In this case, DIV is the number of elements. With the input of the literal PROP for NO it is possible to define values, becoming default for following records BEAM and especially for the import or modification. With following input

```
BEAM PROP NCS 10
```

the cross section number is defined with 10 for all following BEAM / MOD / TRAN or MIRR records.

When defining after PROP (at items NA, NE) one or two numbers, all properties will be preset to those of the elements of the specified continuous beam numbers in the current import source data base (IMPO). In that case the section definitions and subdivisions will be also predefined unless an explicit definition of DIV 0 or DIV -n or explicit BSEC records are specified. DIV +n has here the special function to define a different subdivision, while maintaining the explicit section definitions.

AHIN and EHIN allow the definition of hinges at beam start section and beam end section, respectively. For this, two variants exist. Classical hinge conditions are specified by a combination of the following literals (without spaces in between):

```
N    VY    VZ    MT    MY    MZ    MB    (Default: no hinges)
```

The literals indicate the corresponding sectional force to be unconstrained. PP and MM are defined as "‘all forces"’ and "‘all moments"’. If explicitly "‘no hinge"’ should be defined (for MOD or within a table with other defaults) an empty string "‘ "‘ may be used.

For implicit hinges, on the other hand, a specific hinge reaction is not completely unconstrained but it obeys a defined working law. Implicit hinges, therefore, provide for a more general setting. A corresponding set of working laws (at the most, one for every single sectional force) can be defined by means of the input record SFLA (AQUA). Provision of an implicit beam hinge is then simply achieved by referencing the appropriate working law number. Example:

```
BEAM 1 1 2  NCS 11 AHIN 111 EHIN 112
```

It has to be pointed out, that all hinges are treated with a static condensation at the element level (Guyan Reduction) For eigen value analysis, especially for buckling eigen values larger deviations may occur. If a single beam element is transformed to a truss element by hinges, it looses all its bending properties, thus the buckling is no longer possible within a pure FE analysis. A correct model has to include all degrees of freedom in the global system matrix, thus the effects have to be described by duplicate nodes, kinematic constraints and spring elements.

If NP is -1 a reference axis beam is generated. The axis of the beam then lies in the origin of the cross sectional coordinate system! With the input NP > 0 a pile resp. reference axis beam element is generated, whose attributes are defined with the profile BORE NP.

3.16.1 Plane Beam Coordinate System

Each beam or pile has a local coordinate system x, y, z (see fig. 2.2). The longitudinal axis of the beam NA-NE defines the positive x-direction. The following cases can be distinguished regarding the orientation of the other two axes:

- **Plane frame**

  The structure is defined in the global XY-plane. The local y-axis of the beam is always parallel to the global Z-axis for an international coordinate system (WFRA, WPAI etc.) but in the opposite direction for SOFiSTiK-coordinate System (FRAM, PAIN etc.) as in the

picture below. The local z-axis is then always in the structural plane, based on a right handed coordinate system.

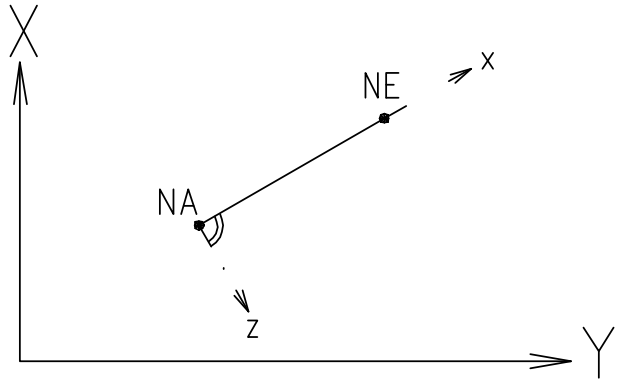

Figure 3.12: Plane frame

- **Girder system**

  The structure is defined in the global XY-plane. The local z-axis is for the SOFiSTiK coordinate system (GIRD, see picture below) parallel to the global Z-axis, but for an international coordinate system (SLAB) in the opposite direction (anti parallel). Thus the local z-Axis is in the gravity direction in most cases. The local y-axis is obtained based on a right handed coordinate system from the other two axises within the structural plane.

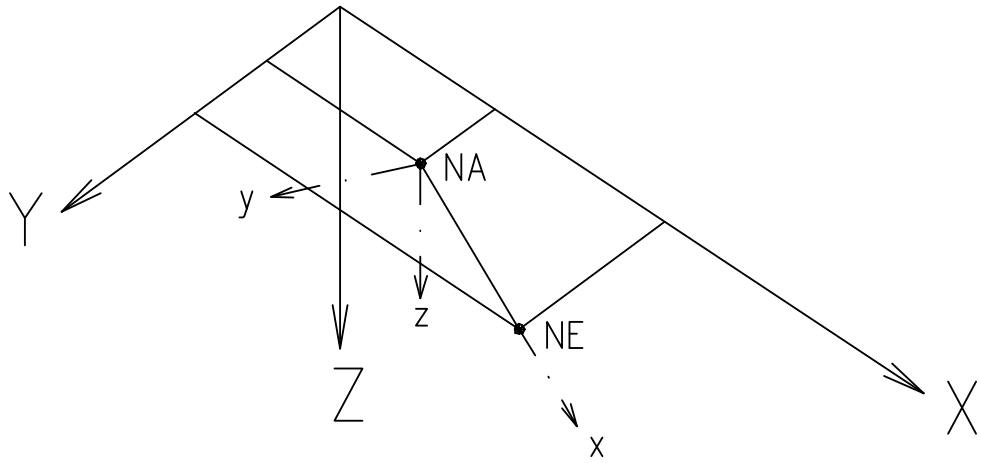

Figure 3.13: Girder system

3.16.2 Spatial Beam Coordinate System

In a three-dimensional system the orientation of the local y-axis must be defined by the user. The parameter KR and the following four values are available for this purpose. The longitudinal axis of the beam NA-NE defines the positive x-direction. The local y- and z-axis are perpendicular to the local x-axes. Their orientation is determined by the three-finger right hand rule.

The following possibilities exist:

- **3.1. KR=0** (Default)

  The local y-axis is horizontal and perpendicular to the axis of the beam, thus to the right of the direction of the beam. Thus the local z-axis is always downwards. The default may be

changed with CTRL LOCA, options 2 and 3 use POSZ instead of the gravity direction.

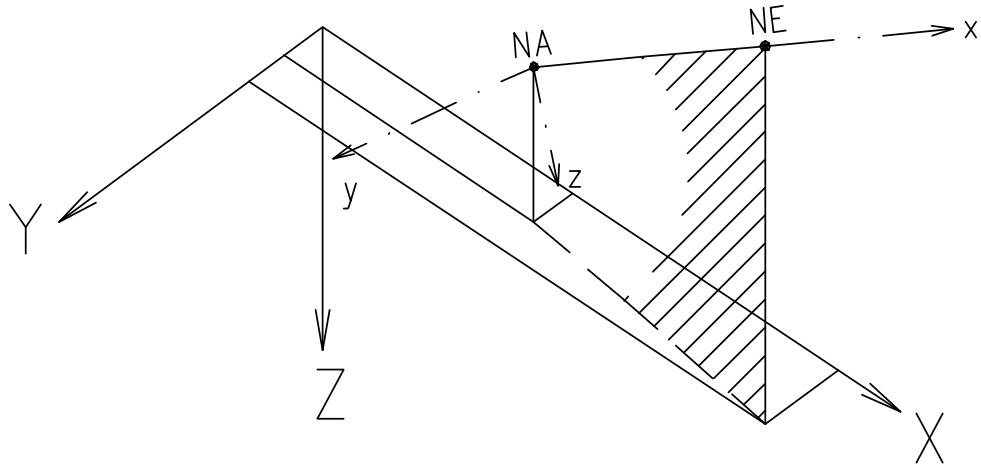

Figure 3.14: Default orientation

In case the beam axis is parallel to the "gravity direction", then there are several possibilities depending on the value of CTRL LOCA:

0	local y in first horizontal axis
1	local z in first horizontal axis
2	local z in global X (IFC)
3	local z in global Y (GENF)

It is strongly recommended however to define the orientation explicitly in those cases.

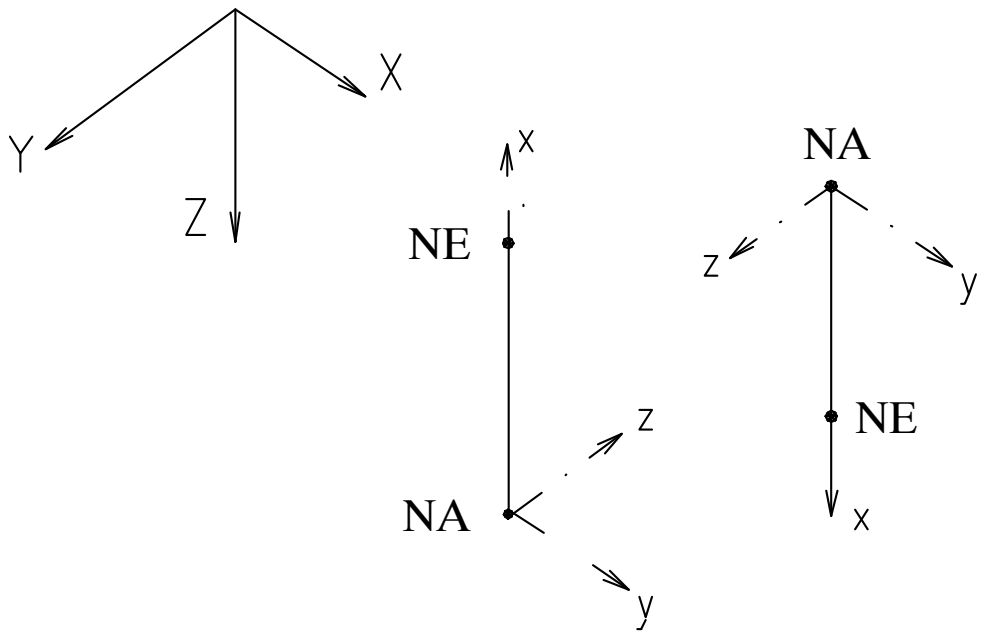

Figure 3.15: Special cases of the default orientation (GDIR POSZ, CTRL LOCA 0)

- **KR positive** (>0)

  A positive value for KR is interpreted as a reference node. The local y-axis (CTRL LOCA 0/2) or the local z-axis (CTRL LOCA 1/3) lies in a plane defined by the nodes NA-NE-KR. Therefore, KR may not lie on the straight line NA-NE.

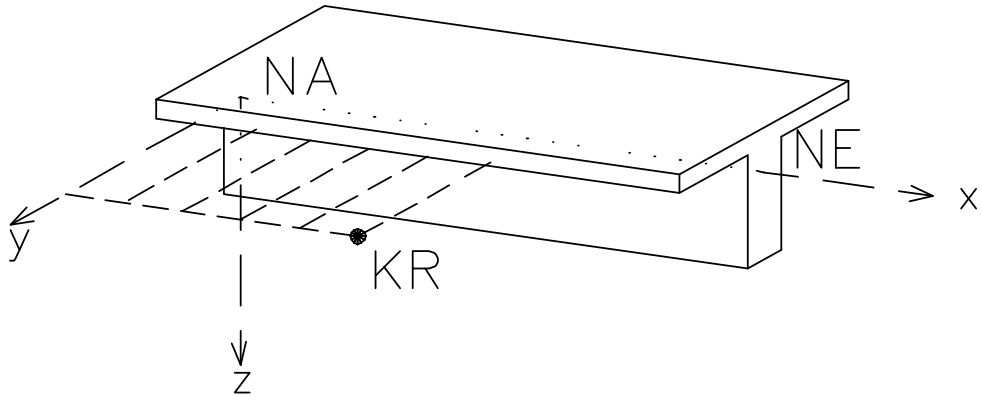

Figure 3.16: Direction node

- **explicit direction by literal**

  If one of the literals POSX, POSY, POSZ, NEGX, NEGY or NEGZ is input for KR the local y-axis (CTRL LOCA 0/2) or the local z-axis (CTRL LOCA 1/3) will be placed on a plane, which is defined by the beam axis and the coordinate axis corresponding to that literal.

- **explicit direction (DRX,DRY,DRZ) or literal**

  If an explicit direction is given it is possible to specify with KR LOCY (default) or KR LOCZ which of the local coordinate axes should be aligned in that direction.

- **additional rotation about DROT KR negative** (< 0)

  A value for DROT is interpreted as an angle in degrees, by which the coordinate system is rotated about the beam axis.

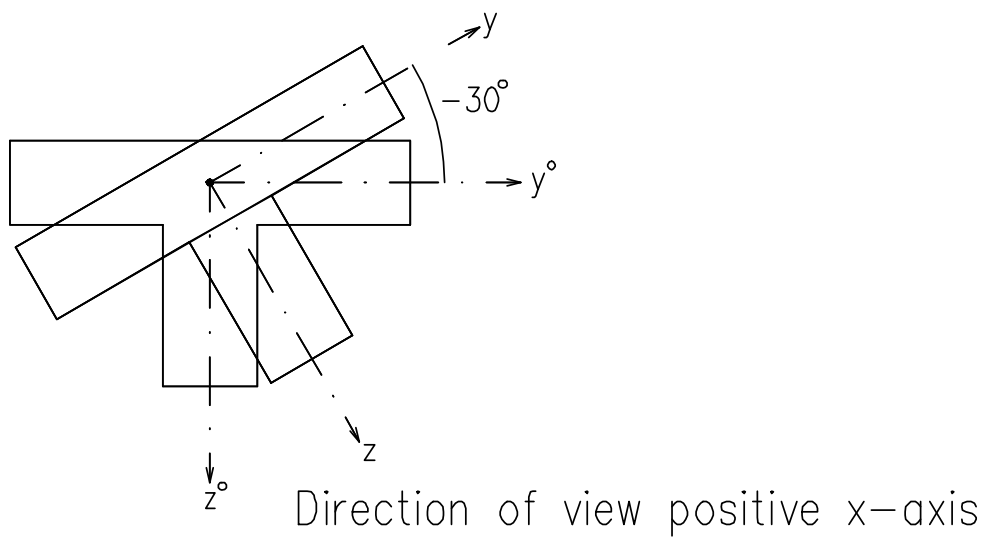

Figure 3.17: Rotation of the cross section

3.16.3 Haunches, sections and continuous beams

Beams can have segments and variable cross sections. Although not all of the programs can consider all the effects resulting from this. One must occasionally settle with an average value (e.g. rotation of the principal axes or shear centre).

The interpolation of cross sections for generated element or element sections is done after SOFIMSHA in a post processing step of AQUA with the input definition of INTE ALL. All sec-

tions referencing to a geometric axis, or are not explicitly specified otherwise will then be recreated and interpolated.

On the other side it is possible to combine several beam elements to a single continuous beam for the design or detailing. This will be detected automatically if the beams are defined in the correct sequence and none of the break conditions defined with CTRL CONT is encountered.

It is also quite common that a beam has small cantilevers which are useful to generate the correct dead load or facilitates the definition of other loading. This has to be defined with record BSEC.

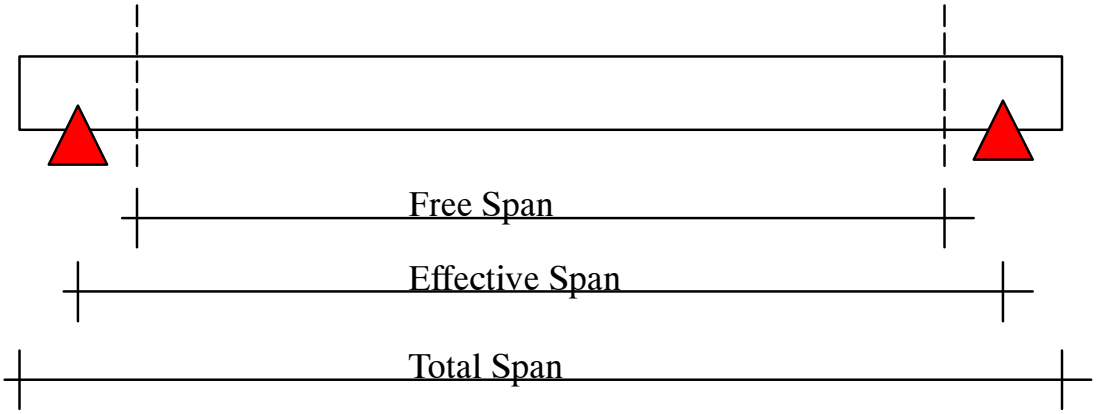

Figure 3.18: Small cantilevers

For a very general position of the nodes relative to the beam (reference axis), there occur additional eccentricities. While the local y- and z-direction are mainly specified via the cross section, there is the possibility to define eccentricities in the beam direction with sections marked as of infinite rigidity which are called "virtual" within the SOFiSTiK-context.

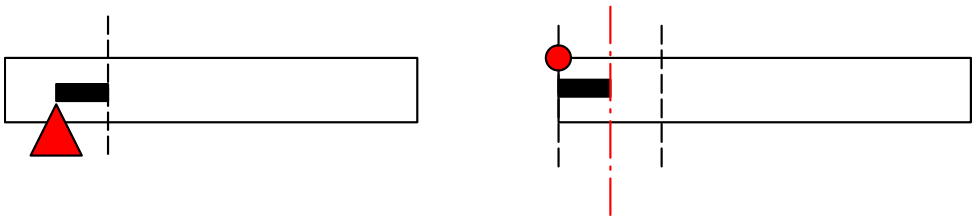

Figure 3.19: Virtual sections

3.17 BSEC – Beam Sections

See also: BEAM

BSEC

Item	Description	Unit	Default
X	Section location	$[m]_{1001}$	!
NCS	Cross section number	–	*
SPEC	Special options of section N Print only if requested D do not apply self weight A Section X value taken to start of beam E Section X value taken to end of beam S Value of X is fraction of effective beam length I interpolate section V Virtual section (has infinite stiffness) B section of bending member C section of compress. member	*Lit*8	*
TYPM	Type of section for main bending	*LIT*	SECT
TYPT	Type of section for transverse bending SECT Regular section FACE Face of a clamped support HFAC Face of a support with articul. connection (masonry) IFAC Section at the face of an indirect support SHEA Critical sect. for shear design	*LIT*	SECT
NO	Beam number	–	*

The output or the design of internal section forces is usually only possible for sections. For non-linear analysis it is necessary to define a sufficient number of sections.

According to the philosophy of Finite Elements, the basic approach is to discretize the model in small elements each with a constant section. However an alternate modeling is to define additional sections within a larger beam element. It is strongly dependent on the implementation of the beam element which model is preferable in individual cases. For a haunched beam two extra effects have to be treated: The inclination of the center line has to be accounted for, and the variation of the stiffness between two sections has to be modeled in some way.

The X-value will be always measured form the specified reference point positive in the direction towards the middle of the beam. Negative beam ordinates thus define cantilevers. The reference point controls also the smoothing algorithm of the forces at the supports. If neither A or E is specified, the program will take all X-values relative to the start node of the beam.

All sections of a continuous beam should follow immediately the definition of the continous

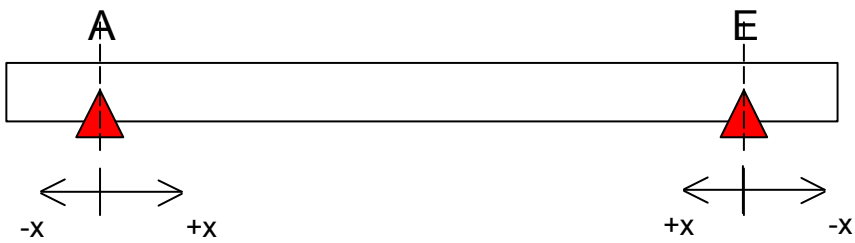

Figure 3.20: X-value for reference point

beam without defining a value for NO or predefined with a PROP definition. But with an explicit definition of a beam number it is possible to define sections for an already existing beam.

3.17.1 Special properties of beam sections

All sections can include additional information for controlling the processing of the sections during the design and the static analysis. If neither bending nor compression member property is selected, AQB will guess this information based on the orientation to the gravity direction and other criteria given from the design codes.

Depending on the kind of support the design will be based on the forces at the face of the support or the middle of the support. The most commonly used equations for the design of rounded moments are based on the uniform pressure of the support force, as is the case for a continuous beam. For example, the rounded moment above the column is given by the support force A and the width a; or it is approximated by the half-sided shear force V and the distance x = a/2 of the section before the middle of the column, as follows:

$$M_I = M_{st} - A \cdot \frac{a}{8} \approx M_{st} - V \cdot \frac{x}{2}$$

For the corners of a frame it is however recommended (cp. booklet 373 DAfStB) to design a rounded moment at a distance of 0.2 a from the face, instead of the moment at the face. The easiest and most straight forward method would be to generate an additional section at x= 0.3 a, where an approximation of the desired moment will be given.

$$M_I = M_{st} - 0.3 \cdot V \cdot a$$

Formerly it was common use to define also a decisive shear cut in a greater distance from the support. This shear cut was used for a linear reduction of the shear force. Foreseen that this procedure is not mechanically consistent, the full shear force at the support edge is also necessary for the check of the compressive stress. The input of an additional shear cut must not be used anymore for checks according to the new design code generation.

3.17.2 Haunches and interpolation of sections

In general there will be an interpolation of sections for all defined sections after the definition of the system with an AQUA INTE ALL, If a beam has a reference to a bridge axis, this will ve done for all sections. If that is not the case, it will be done for all sections not explicitly specified based on the defined sections before and after. Thus it becomes important to distinguish between the definition of a jump of a section and a smooth transition: If the section number is not specified, the last defined section number before this section will be taken provisionally and the section marked as to be interpolated. A run with AQUA and the definition INTE 0 will then create all missing sections. If the start and end section of a beam sequence or an eyplicit

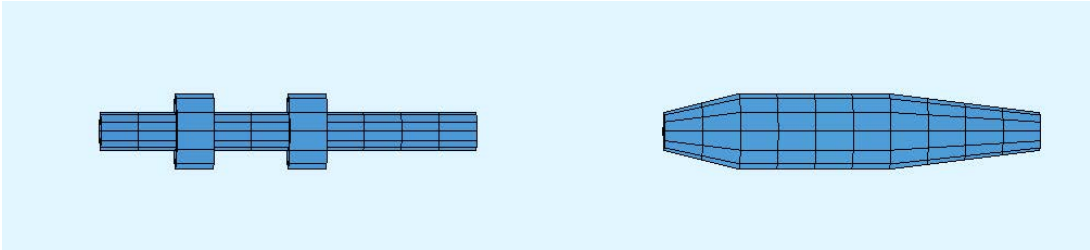

Figure 3.21: Jump or smooth transition of section

single beam should be also interpolated, an explicit definition of the corresponding x-value with SPEC I is required.

A jump of section has to be defined either by two sections with identical x-Values, which can be done for a single beam only within a sequence of sections without a value for NO defined in total. When using individual section definitions (with a value for NO) the two section numbers may be specified with NS1.NS2. As it is not allowed to have more than two sections at the same location, additional entries will be removed automatically with a warning. It is also a very bad idea to define two sections with a slight difference in X, because the haunch created by that has to transform forces to the new gravity center yielding very strange results for the design. An element created by the variational principle can not cover a jump of section completely, this may lead to strange results for all loadings creating deformations (Prestress, Temperature)

```
grp 1 titl "`System to the left"'
beam mesh 11 12 ncs 1 div 10
bsec 0.1 ncs 1 no 1002 ; bsec 0.0 ncs 2 no 1003
bsec 0.1 ncs 2 no 1003 ; bsec 0.0 ncs 1 no 1004
bsec 0.1 ncs 1 no 1005 ; bsec 0.0 ncs 2 no 1006
bsec 0.1 ncs 2 no 1006 ; bsec 0.0 ncs 1 no 1007

grp 2 titl "`System to the right"'
beam mesh 21 22 ncs 1 div 10
bsec 0.1 ncs 2 no 2002
bsec 0.0 ncs 2 no 2007
```

Beam sections may be also defined without defining a value for NO after a BEAM PROP record. Than these definitions will be applied to all following beam elements, not having an explicit BSEC definition on their own. Independently defined sections with a beam number NO have no effect on this behaviour. A scaling of distances along the beam will not take place.

3.17.3 Element-Formulation

The properties of the variant beam elements in SOFiSTiK may be summarized as follows:

0 Analytical solution for a prismatic beam
Fastest approach but not suitable for general cases.

1 Element matrices are obtained by a variational approach (ASE, DYNA)
The displacements of the beam are cubic parabolas. The inverse stiffness is interpolated linearly between two sections. Inclination of center line and warping torsion is accounted for. Complex section modeling should be avoided, especially for temperature loading.

2 Element matrices are obtained by analytical transfer matrices.(STAR2)
Stiffness is assumed with a constant mean value between two sections. There are no limits on sections within a beam.

3 Element matrices obtained by numerical transfer matrices. (PILE)
The inverse stiffness is interpolated linear between two sections There are no limits on sections within a beam.

3.18 QUAD – Plane Elements (Disks / Plates / Shells)

See also: GRP

QUAD

Item	Description	Unit	Default
NO	Element number or mesh option	–	*!
N1	Number of node 1	–	!
N2	Number of node 2	–	!
N3	Number of node 3	–	!
N4	Number of node 4	–	-
MNO	Element material number	–	*
MRF	Material number for reinforcements	–	*
NRA	Element Stiffness formulation	–	7
POSI	Element position w.r.t. the nodes CENT Element centred at nodes ABOV Element above the nodes BELO Element below the nodes	*LIT*	CENT
T	Thickness t	$[mm]_{1010}$	*
T1	Thickness at node K1	$[mm]_{1010}$	T
T2	Thickness at node K2	$[mm]_{1010}$	T
T3	Thickness at node K3	$[mm]_{1010}$	T
T4	Thickness at node K4 (not for orthotropic plates)	$[mm]_{1010}$	T
C	Bedding perpendicular to element	$[kN/m^3]_{1097}$	-1
CT	Bedding tangentially within surface	$[kN/m^3]_{1097}$	-1
KR	Orientation of local coordinates	*LIT*	*
DRX	direction	–	-
DRY		–	-
DRZ		–	-
DROT	Additional rotation about local z-axis	$[\circ]_5$	0
TX	Orthotropic thickness in local x-direction	$[mm]_{1010}$	-
TY	Orthotropic thickness in local y-direction	$[mm]_{1010}$	-
TXY	Orthotropic thickness for lateral bending	$[mm]_{1010}$	-
TD	Orthotropic thickness for torsion	$[mm]_{1010}$	-
M	Subdivison of edge N1-N2,N3-N4	–	1/0
N	Subdivison of edge N2-N3,N4-N1	–	1/0

Table continued on next page.

Item	Description	Unit	Default
M12	Optional middle node of edge N1-N2	–	-
M23	Optional middle node of edge N2-N3	–	-
M34	Optional middle node of edge N3-N4	–	-
M41	Optional middle node of edge N4-N1	–	-

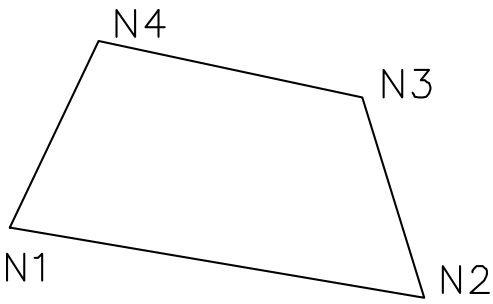

Figure 3.22: QUAD plane element

The element number may be chosen arbitrarily. If not specified the next free number within the current group is selected. Duplicate numbers though are not allowed.

The element's geometry is checked by the program for node numbering order, re-entrant corners. A side ratios smaller than 1 : 5 is not recommended in general.

Several element actions can be selected through the value of NRA. The addition of these values results in a combined action. In general the input of this value is only sensible for three-dimensional systems.

NRA =	0	= geometry only
	1	= plate action
	2	= membrane action
	4	= in-plane rotation

The input of a negative value for C or CT represents a factor for the foundation coefficient of the BMAT record, while a positive value determines an absolute foundation coefficient for this element.

The orientation of the coordinate system is described in section 2. For three-dimensional systems one of the local axes can be oriented towards a particular direction with respect to the global coordinate axes; this can be of importance in the assessment of the results at the nodes. The following can be defined as a reference orientation for KR:

POSX,POSY,POSZ	local x in the positive global directions
NEGX,NEGY,NEGZ	local x in the negative global directions
XY,YZ,ZX	local x in positive global projected directions
YX,ZY,XZ	local x in negative global projected directions
LOCX,LOCY	local axis in explicit direction

nodenumber align local x towards a node

An input for DROT defines an angle (in degrees), by which the default coordinate system is rotated around the local z-axis.

With POSI=BELO the elements are arranged eccentrically below the nodes. This can be useful in case of plates with joists, in order to model the T-beam action for elements with different thicknesses. The input in such a case is as easy as that for a regular plate, due to the constant height level of the nodes lying at the upper edge of the plate. Because of the necessary axial force effects, the analysis of eccentric plates can only be done with SYST SPAC in the program ASE.

Orthotropic thickness is specified as effective thickness in that direction. The normal and bending stiffness is then calculated with those given thickness values. As an alternate definition it is possible to specify a negative section number. Then the area and inertia Iy of that section is normalized to 1m width and used as stiffness for the plate. Variable thicknesses in the nodes T1 through to T4 can not be input simultaneously with an orthotropy via TX to TD. By defining M and N or with a selective literal for NO the generation of a M x N structured block mesh with curved edges and a variant thickness is possible by a COON's interpolation between the edges. For any edge a positive mid-node number selects a quadratic (isoparametric) interpolation, while a negative value will use a circular geometry. A value of zero defines a straight edge. All generated nodal coordinates are compared against already existent nodes and a new node is created only if necessary. For more details see chapter NODE

NO	Effect	Default for KMij
MESH	with new node numbers	-
IMSH	with interpolated node numbers	IMSH
MMSH	interpolated numbers in direction M	FIT/IMSH
NMSH	interpolated numbers in direction N	FIT/IMSH
KMSH	interpolated numbers along to edges	IMSH
FIT	use predefined edges	FIT
FITL	generate and use linearised edges	FITL
IFIT	use full Coon-Algorithm for numbers	FIT

If a literal "':T"' is appended, a pure triangular mesh may be created for special cases. The QUAD-elements will be divided along the short diagonal, with "':T1"' or "':T2"' at the first or second diagonal.

Mesh generation KMSH is a method taken from GENF, but does not really suit in the new concepts of SOFIMSHA. By defining only three nodes N1 to N3 a first step will subdivide (IMSH) or collect the nodes along that edges. Than these edges will be copied in parallel along the nodes of the other edge to give an irregular but structured mesh. Numbers of nodes are also fully structured. The corresponding variant with free node numbers would require two TRAN commands before allowing the standard FIT option to be used.

With the input of the literal PROP for NO it is possible to define values, becoming default for following records and especially for the Import. With the input for instance

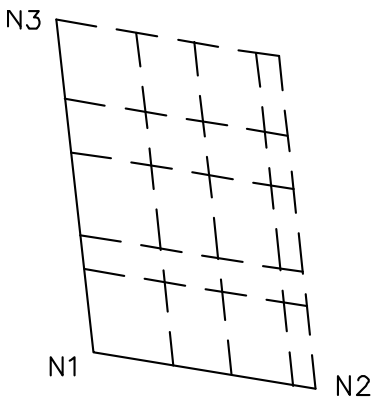

Figure 3.23: Mesh generation KMSH

```
QUAD PROP T 0.2 MNO 1
```

the element thickness is defined with 0.2 m and the material number with 1 for all following QUAD records. The other possible inputs for the different thicknesses are set here with their default due to the input for T. Here it is to note that any definition of a thickness value will trigger a completely new default. Thus:

```
QUAD PROP  T 0.5 TX 0.3 TY 0.2 TXY 0.1 TD 0.1
```

```
QUAD NO 1 N1 1 N2 2 N3 3 N4 4 T 0.4
```

modification of the element thickness to 0.4 m and deactivating the default for the orthotropic thicknesses (= no orthotropy)

```
QUAD NO 2 N1 4 N2 3 N3 5 N4 6 T 0.4 TX 0.3 TY 0.2 TXY 0.1 TD 0.1
```

modification of the element thickness to 0.4 m and input of the orthotropic thicknesses

When defining after PROP (at item N1) an element number, all properties will be preset to those of that element in the current import source data base (IMPO).

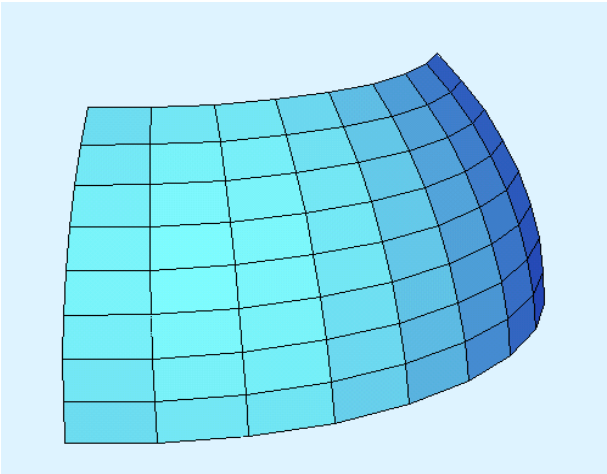

Figure 3.24

QUAD FIT will create QUAD elements also for different subdivisions on all edges by up to six internal quadrilateral subareas. One condition has to be met however:

- The number of odd subdivisions must be even (0 or 2 or 4)

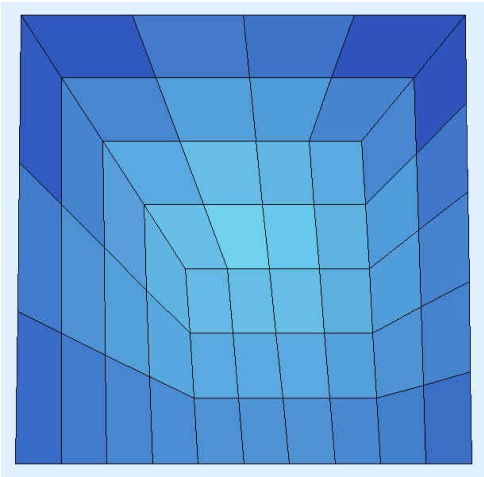

Figure 3.25

For triangular areas a second condition has to be met:

- The triangular inequality has to be fulfilled, i.e. for any permutation of the three subdivisions a, b and c the sum of two has to be at least as high as the third value (a+b≥c)

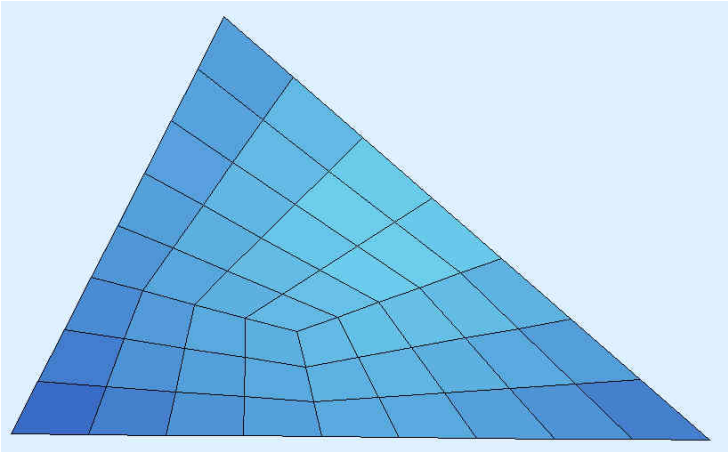

Figure 3.26

Pure triangle meshes will be only created with QUAD MESH and specification of an explicit division value for N.

Surface meshes on existing regular BRIC-structures may be created with the option QUAD FITS. The use of this option is reserved for special cases.

3.19 BRIC – Three-dimensional Solid Elements

See also: GRP

BRIC

Item	Description	Unit	Default
NO	Element number	*–/LIT*	!
N1	Number of node 1	–	!
N2	Number of node 2	–	!
N3	Number of node 3	–	!
N4	Number of node 4	–	!
N5	Number of node 5	–	!
N6	Number of node 6	–	!
N7	Number of node 7	–	!
N8	Number of node 8	–	!
MNO	Material number of the element	–	1
M	Subdivision of edge N1-N2,N3-N4	–	1
N	Subdivision of edge N2-N3,N4-N1	–	1
K	Subdivision of edge N1-N5 etc	–	1
M12	optional middle node of edge N1-N2	–	-
M23	optional middle node of edge N2-N3	–	-
M34	optional middle node of edge N3-N4	–	-
M41	optional middle node of edge N4-N1	–	-
M56	optional middle node of edge N5-N6	–	-
M67	optional middle node of edge N6-N7	–	-
M78	optional middle node of edge N7-N8	–	-
M85	optional middle node of edge N8-N5	–	-
M15	optional middle node of edge N1-N5	–	-
M26	optional middle node of edge N2-N6	–	-
M37	optional middle node of edge N3-N7	–	-
M48	optional middle node of edge N4-N8	–	-

The element number may be chosen arbitrarily. If not specified the next free number within the current group is selected. Duplicate numbers though are not allowed.

A tetrahedron element may be specified with N4=0, the nodes N1 to N3 describe then a counter-clockwise base plane and N5 the fourth point above. As the hexahedron element has a much higher precision even for distorted elements with coinciding nodes, the tetraeder element should be used only in rare conditions like automatic meshing. The geometry of the six sides of the element are checked by the program, as is the case for QUAD-elements.

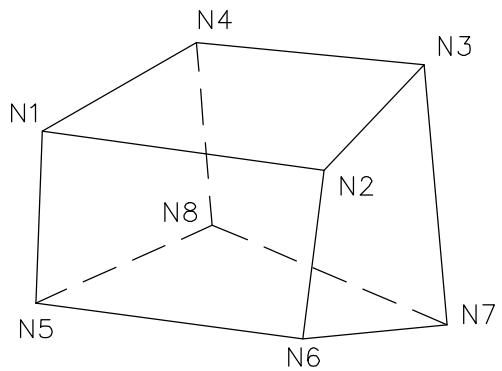

Figure 3.27: BRIC solid element

If a literal is specified for NO the generation of a structured block with M x N x K elements is generated with free or newly generated nodes along the edges, as for QUAD a mesh with curved surfaces is possible by a COON's Interpolation between the edges. For any edge a positive number selects a quadratic interpolation, while a negative value will use a circular geometry, a 0 is a straight line and FIT will search a defined nodal sequence, FITL will generated lienarized sequences. Any edge may have its own settings to establish the list. For more details see chapter NODE.

NO	Effect	Default for KMij
MESH	with new node numbers	-
IMSH	with interpolated node numbers	IMSH
MMSH	interpolated numbers in direction M	FIT/IMSH
NMSH	interpolated numbers in direction N	FIT/IMSH
KMSH	interpolated numbers in direction K	FIT/IMSH
FIT	use predefined edges	FIT
FITL	generate and use linearised edges	FITL
IFIT	use Coon-Algorithm for numbers	FIT
FITQ	Interpolate QUAD-area definitions	
FITS	Interpolate BRIC surface definitions	

If a FIT is used, the sub division of corresponding edges must match of course. The algorithm creates surfaces in a first step, allowing to interpolate non regular subdivided areas.

If a literal "':T"' is appended, pentahedra with a triangular face may be created for special cases.

With the input of the literal PROP for NO it is possible to define values, becoming default for following records and especially for the Import. With the input for instance

```
BRIC PROP MNO 1
```

the material number is defined with 1 for all following BRIC records.

When defining after PROP (at item N1) an element number, all properties will be preset to those of that element in the current import source data base (IMPO).

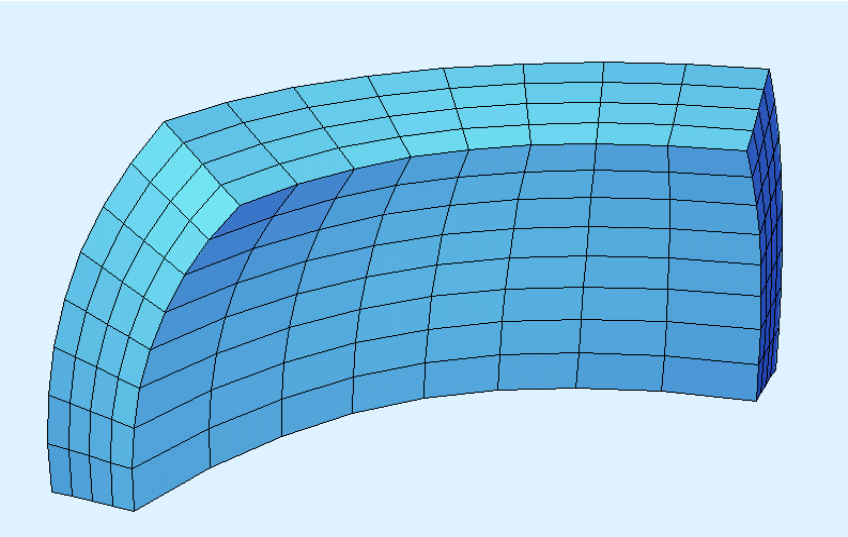

Figure 3.28: Coons-Patch of a double curved body

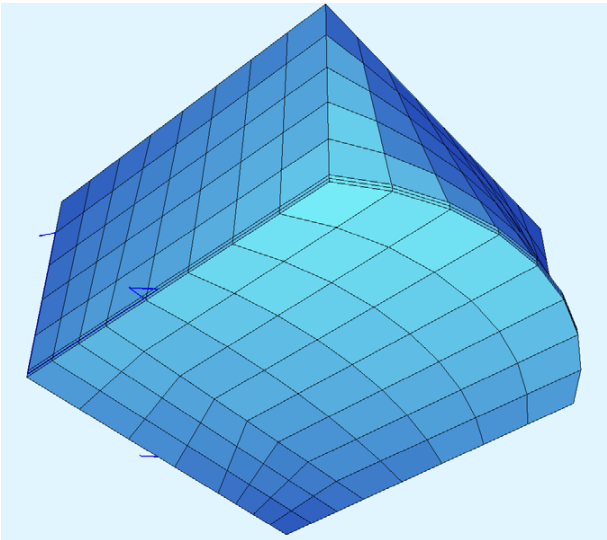

Figure 3.29: Coons-Patch with a non regular base surface

3.20 SPRI – Spring Elements

See also: BOUN, FLEX, GRP

SPRI

Item	Description	Unit	Default
NO	Spring number PROP Define defaults MESH Generation of elements IMSH Generation of elements FIT Fitting of elements FITL Fitting of elements QGRP Coupling of areas QREF Coupling of areas SBOX Springs for nodes within SBOX QBOX Springs for QUADs within SBOX	–	!
NA	Number of node where the spring acts	–	!
NE	Number of a second node AUTO create node automatically	–	-
DX	explicit X-component of direction	m/LIT	0
DY	explicit Y-component of direction	m	0
DZ	explicit Z-component of direction	m	0
CP	Axial spring constant	$[kN/m^3]_{1097}$	0
CT	Lateral spring constant	$[kN/m^3]_{1097}$	0
CM	Rotational spring constant	$[kNm/m^2/rad]_{1100}$	0
PRE	Prestressing	$[kN/m^2]_{1096}$	0
GAP	Spring gap (slip)	$[m]_{1001}$	0
CRAC	Rupture stress	$[kN/m^2]_{1096}$	-
YIEL	Yield stress YIEL<0 only in compression YIEL>0 tension and compression	$[kN/m^2]_{1096}$	-
MUE	Friction coefficient for the lateral spring	–	-
COH	Cohesion value for the lateral spring	$[kN/m^2]_{1096}$	0
DIL	Dilatation value for the lateral spring	–	-
GAPT	Spring gap (slip) of transverse spring	$[m]_{1001}$	0
DP	Damping in axial direction	$[kNsec/m^3]_{1160}$	0.
DT	Damping in lateral direction	$[kNsec/m^3]_{1160}$	0.
DM	Damping moment about the axis	$[kNsec/m^2]_{1161}$	0.

Table continued on next page.

Item	Description	Unit	Default
EXPP	Exponent for non-linear damping DP^{expp}	–	1.0
EXPT	Exponent for non-linear damping DT^{expt}	–	1.0
EXPM	Exponent for non-linear damping DM^{expm}	–	1.0
MNO	Number of stress-strain curve / material	–	-
AR	Reference area	[∗]	1.0
DIV	Subdivision in Elements	–	-
NM	optional Midpoint Control Node	–	-
NARE	Start node of reference edge	–	-
NERE	End node of reference edge	–	-
NMRE	optional midpoint node of reference edge	–	-
KR	Direction data of moment-axis or	*LIT/–*	0
DRX		–	*
DRY	Explicit direction of moment-axis	–	*
DRZ		–	*
DROT	Additional rotation about spring axis	$[\circ]_{5}$	0
MPRE	Prestress moment	$[kNm/m^2]_{1100}$	0
MGAP	rotational spring gap (slip)	$[rad]_{1004}$	0
MCRA	rotational failure moment	$[kNm/m^2]_{1100}$	-
MYIE	yield moment	$[kNm/m^2]_{1100}$	-
DXSQ	explicite search direction	$[m]_{1001}$	0
DYSQ	for QGRP	$[m]_{1001}$	0
DZSQ		$[m]_{1001}$	0

This record defines elastic support in points, along edges or in areas. All Values are thus referred to an area AR, which may have different units. The default is always 1.0, thus a definition of a single spring constant in [kN/m] will yield the expected result. The generated elements however will always have values based on a single point.

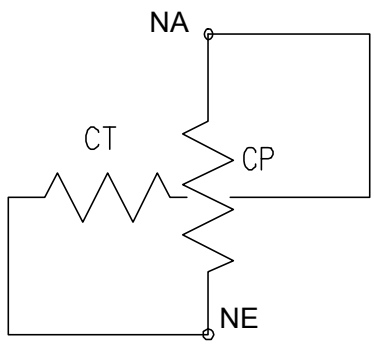

Figure 3.30: Spring element

NO	specified AR	Calculated dimension
numerical / SBOX	Area of support [m^2]	1.0
MESH / IMSH FIT / FITL	width of support [m]	Length of support
QGRP / QREF / QBOX	1.0 [-]	Area of QUAD elements

Springs can be defined as support conditions or as coupling springs between two nodes. The second node number must not be input in the first case. If elements should be generated along a sequence of nodes between NA and NE, the literals MESH / IMSH or FIT / FITL have to be specified at NO. The optional second nodes of the springs may then be defined with items NARE and NERE. For axis symmetric systems the value of AR is preset with the current radius of every node, which can be suppressed with AR = 0.0 to suppress this feature. A support with an explicit work law does not allow a reference area.

For NO it is also possible to select the literal QGRP, QREF or QBOX, this will generate springs for all nodes of the QUAD elements of group or Region number NA or within the SBOX, integrating the influence areas. The second node will be created within the QUAD elements of **group** NE, if that value is specified. The value CTRL SNAP defines a threshold for the QUAD shape function, where nodes exceeding that value will be collapsed to the adjacent QUAD element node.

With the input of the literal PROP for NO it is possible to define values, becoming default for following records and especially for the Import. With the input for instance

```
SPRI NO PROP CRAC 0
```

the spring failure load is defined with 0 for all following SPRI records.

When defining after PROP (at item NA) an element number, all properties will be preset to those of that element in the current import source data base (IMPO).

With the input of the literal SBOX for NO, all nodes within the defined SBOX will get a spring of the specified type. With QBOX all QUAD elements with the centre within the SBOX will be used to calculate the influence surface.

It is possible to specify for DX the literals +R or -R. This will align the element into a radial direction to the node specified with following item (DY). With a FIT NM < 0 (circular arc) this point may be omitted, the center of the arc will be taken instead as orientation point. For the area definitions QGRP, QREF and QBOX it is also possible to define the literals LOCX, LOCY, LOCZ, aligning the spring direction in the mean directions of the local coordinate system of the generating QUAD elements.

3.20.1 Spring element

The spring is defined by means of a principal direction (DX,DY,DZ) and two spring constants. The acting forces or deformations are then split up into a component for the principal direction and a remainder or lateral component perpendicular to the principal one. The spring constants CP and CT are assigned to the principal and the lateral direction, respectively. Two lateral springs perpendicular to each other with the same spring constants are likely to be assigned

in this manner. Since the directions of these springs can be freely selected, one can speak of an isotropic lateral spring stiffness. The total spring force has the following form:

$$P = \begin{vmatrix} PX \\ PY \\ PZ \end{vmatrix} = \begin{vmatrix} DX \\ DY \\ DZ \end{vmatrix} \cdot PH + \begin{vmatrix} PTX \\ PTY \\ PTZ \end{vmatrix}$$

$$PT = (PTX^2 + PTY^2 + PTZ^2)^{1/2}$$

Attention: A spring connecting two separated nodes without a transverse spring constant may violate the global equilibrium of moments. There will be a warning if the possibility of such a mechanism is encountered, i.e. the acting direction is not aligned with the distance between the nodes.
With a transverse spring constant we have in such cases an additional transverse displacement created by the sum of the rotations in the nodes. However this establishes the need to define a rotational stiffness, constraint or support for the nodes of the spring.

The values of PH and PT affect the various combined non-linear effects. In the general three-dimensional case the lateral force can only be input as components or as an amount PT.

If one wants to define different lateral spring stiffness, one should define two or three separate principal springs. Since the input parameter CM usually does not correspond with CP, concerning the direction of action or regarding the non-linear effects, it is likely that only in the most rare cases it can be defined in conjunction with a displacement spring. As a rule therefore, separate rotational springs (CP=CT=0.0) should be defined.

The direction of coupling springs is obtained from the difference of the two nodes (NE-NA). If the nodes coincide or in the case of support springs, the direction must be input explicitly. The method for choosing the signs for DX, DY and DZ, which are important for non-linear analysis (compression or tension?), is to imagine that the second node is offset from the first by this amount.

If a spring has force components (CP,CT) and moment components (CM) it is possible to define the direction of the rotational spring with items KR to DROT analogue to the BEAM definition perpendicular to the main force direction. Without a specification the direction of both components will be the same. This feature may be also used to evaluate rotations of the bearings of a bridge, where CM may be defined as 0.0.

Hint for DRX, DRY, DRZ:
Due to reasons of consistency of the displacement spring a rotation **about the definition direction** generates '**compression**' in the spring - that means therefore a **negative** spring displacement and a **negative** moment.

With PRE a prestress may be defined. The spring, in its initial position at rest, already exerts a force in its direction upon the node. A prestress for the lateral spring is not defined.

When a dilatation value is defined, a displacement in the lateral direction will generate a component in the axial direction DIL·u-t. Non-linear effects are controlled with CRAC, GAP, YIEL,

MUE and COH. Non-linear effects are activated when a non-zero value is provided, except for the failure load (CRAC), which can be set to zero.

Prestress:
The failure and yield loads are shifted by the amount of the prestress.

Gap:
The spring transmits forces along its axis only after its deformation has exceeded the gap.

Failure load:
Upon reaching the failure load the spring fails in both the axial and the lateral direction. The failure load is always a tensile force or a positive moment.

Yield load:
Upon reaching the yield load, the deformation component of the spring increases in its direction, without a corresponding increase of the spring force.

Friction coefficient:
If a friction coefficient and/or a cohesion are input, the lateral spring can not sustain forces greater than:

Friction_coeff. · Compressive_force + Cohesion

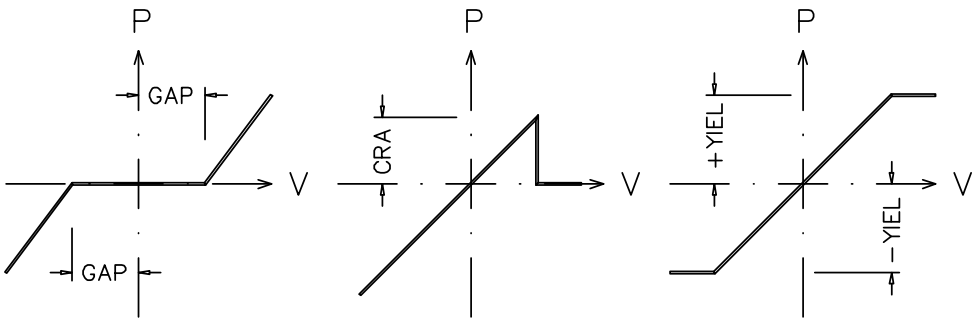

Figure 3.31: Spring characteristic curves

The non-linear effects can only be taken into account by a non-linear analysis (e.g. STAR2/TALPA/ASE/DYNA). The friction and cohesion are effects of the lateral spring, while all other effects act upon the axial spring (CP or CM). For now a combination of nonlinear effects for the forces and moments is not allowed.

Instead of these simple non-linear effects you may also assign a general work law MNO to a spring element. If MNO is defined together with the influence area AR, then the material MNO is used instead of the work law to create the spring constants from the bedding values:

CP	:=	Cb · AR $[kN/m = kN/m^2 \cdot m^2/m]$
CQ	:=	Cq · AR

This value AR=A/L will also be used independent of MNO by HYDRA for the conversion of thermal or hydraulic conductivities.

The input of a negative value for AR (also without MNO) will select an inverse spring definition. Then the non-linear properties are defined inversely, i.e. the force in the axial direction will not become greater than COH+MUE·the vector length of the combined transverse force, which will not become greater than YIEL. This is useful for the description of anchors and piles in

soil mechanics. **ATTENTION**: The above effects and the dilatation are new and will be gradually implemented in the various modules. Please read the relevant Log-files for the latest information on the modules.

3.20.2 Special hints:

More complicated stress-strain curves can be generated by combining several non-linear springs in parallel or in series. A change of the direction component signs can be very helpful in this context. These signs have an effect on the sign of the spring force.

Negative spring constants can be used for the modeling of appended articulated columns according to 2nd order theory or for similar effects. In these cases attention should be given to the correct consideration of the load safety factor.

In the case of non-linear analysis additional springs with small spring constants can possibly simplify the convergence or even enable it in the first place.

The prestress acts in all the load cases and it can therefore in general not be used for load super-positioning in the program MAXIMA.

Support displacements or rotations can be described by defining a spring of stiffness 1E20 and a loading equal to displacement times 1E20. This technique avoids the rebuilding of the equation system for each particular load case.

3.20.3 Damper

A damping element is only effective for dynamic analysis. All Remarks for the springs concerning directions and influence width or areas hold as well for the dampers.

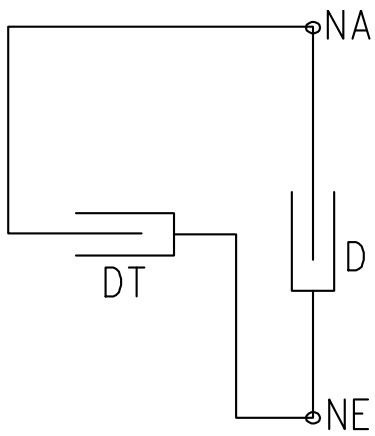

Figure 3.32: Damping element

By defining MNO and the influence area AR it is possible to preset the damping values DP and DT for a radiation boundary for compressive and shear waves of material MNO:

$$\text{DP} := \sqrt{(\rho \cdot K) \cdot AR}\ [kN \cdot sec/m = \sqrt{(kN \cdot sec^2/m/m^3 \cdot kN/m^2) \cdot m^2}]$$

$$\text{DT} := \sqrt{(\rho \cdot G) \cdot AR}$$

Non-linear damping may be used within DYNA and ASE. When defining those exponents it is very important to follow the correct set of units (m and sec), as the law is then no more

independent of the selected units.

$$P = D \cdot v^{exp}$$

Non-linear effects are calculated based on the sum of spring and damper force.

3.21 BOUN – Distributed Support

See also: SPRI, FLEX, GRP, NODE

BOUN

Item	Description	Unit	Default
NA	Starting node or element number	–	!
NE	End node number	–	!
NM	Increment of numbers or Literal FIT / FITL	–/*LIT*	*
TYPE	Direction of support CX in global X-direction CY in global Y-direction CZ in global Z-direction CN in longitudinal direction CT in both transverse directions DX Rotation about global X DY Rotation about global Y DZ Rotation about global Z DN Rotation about longitudinal DT Rotation about both transverse directions M*NNN* Material number for SBFEM	*LIT*	!
CA	Bedding constants at the beginning	[*]	!
CE	Bedding constants at the end	[*]	CA
REF	Axis for the increase if CA ≠ CE XX global X-axis YY global Y-axis ZZ global Z-axis	*LIT*	*
RX	Support direction N in global coordinates	–	*
RY	if direction deviates from the difference	–	*
RZ	between the nodes.	–	*
DIV	Equal partitioning of edge segment	–	-
PROG	Geometric progressions of created nodes	–	-
TITL	Boundary element designation	*LIT*24	-

This record is used for the description of boundary elements (Post processing or elastic support conditions) A boundary element consists of an initial record that allows the input only for NA (= element number NO) and TITL, followed by any number of records that describe the segments of the boundary. In general rule, the first node number of a new record must coincide with the last number of the previous record.

SOFIMSHC resp. SOFiPLUS will generate a boundary element for every structural line with a group number.

The segments of the element are always specified by a start node NA and an end node NE, to select the intermediate nodes we may use for KM:

- a number describing an increment
- Literal FIT or FITL to use a nodal sequence. (NODE)

Hint:
The boundary element has been used in the past to generate nodal fits, old definitions with the now obsoleted items DIV and PROG before TITL will be still processed.

Example:

```
BOUN 1001 TITL 'WALL ALONG AXIS K-K'
BOUN   1   10   1  CZ 3.2E5
      10   90  10  ==
      90   95   1  ==
```

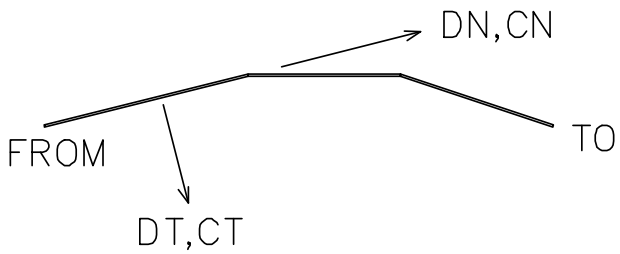

Figure 3.33: BOUN boundary element

In three-dimensional systems the direction T of the boundary is not uniquely defined. The program therefore introduces supports in two directions of the boundary perpendicular to each other. This corresponds to a uniform support in all directions perpendicular to the line connecting the nodes.

If one wishes to have only one of the directions elastically supported, one can select the direction N, and define the desired direction by means of RX, RY and RZ.

Elastic foundation

The unit of the bedding depends on the selected type: $[kN/m^2]_{1096}$ or $[kNm/rad/m]_{1099}$. The boundary element adheres to the Winkler assumption. It simplifies the definition of elastic supports in any direction independently of the employed elements. The formulation of the Winkler assumption is an engineering trick which, among other things, ignores the shear deformations of the supporting medium. The determination of a reasonable value for the foundation modulus often presents considerable difficulty, because this value depends not only on the material parameters but on the geometry and the loading as well. One must always keep this in mind, when assessing the accuracy of the results of an analysis using this theory.

The BOUN-element considers the continuous foundation through a spring matrix, which is the result of an energy inspection, when the displacements between two nodes are linearly interpolated (infinitely rigid load distribution beams with hinges at the nodes). This is a compromise between a support with single springs and an exact solution of the differential equation. Thus a static connection is only possible at the nodes of the system. Therefore, a FE-typical partitioning of the system must be chosen.

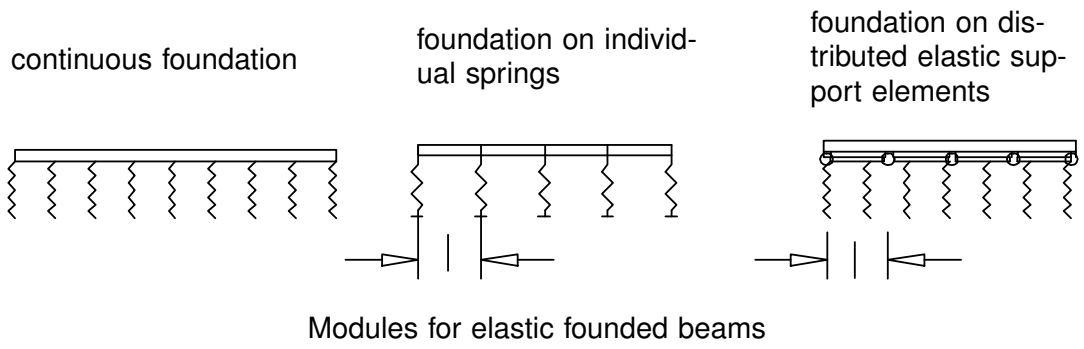

Figure 3.34: Foundation models

This formulation is fully compatible with the QUAD and BRIC elements, meaning that there are no gaps between element and foundation.

Only the single springs are available for non-linear effects. For these springs the width between the nodes can be determined automatically by SOFiMSHA, when one uses the element generator along with a Winkler coefficient.

A small gap results in the case of beam elements due to the cubic formulation of the displacements, but it is usually insignificant. More serious is that the loads only act at the nodes. Thus the following occurs between two beam nodes:

1. The distribution of shear forces due to the foundation is constant.
   The value is correct for the middle of the beam, but it lacks some components at the edges, which are equal to half the beam length times the foundation base stress.
2. The moment distribution due to the foundation is linear.
3. Beam loads generate a garland-shaped moment distribution.
   The appropriate loading are nodal loads.

This is why it is suggested, at least for the boundary region, to make the boundary and the beam element lengths approximately double the distance of the shear section from the support. For numerical reasons, however, the beam elements should not become shorter than the height of the cross section.

An important upper limit for the length of the boundary element results from the stiffness of the supported structure. For elastically supported beams, this is described by the characteristic length L.

$$L = \sqrt[4]{\left(\frac{4 \cdot EI}{c \cdot b}\right)}$$

The solution for the displacement due to concentrated loads is a wave, which always has a zero crossing at distance L. In order for the boundary element to be able to approximate this, its segments must be smaller than one quarter of that length.

When this is not adhered to, the boundary element tries to represent this distribution through a

wild oscillation. These results are thus severely disturbed. If the structure's stiffness is zero, the characteristic length is zero as well, and the boundary element can not be used for individual loads at all.

Comparative analysis have shown, that an elastically supported beam is significantly better approximated by boundary elements with a continuous foundation than by single springs.

If the elastic coefficients CA and CE are different, it is necessary to specify if the linear variation between those two values should be performed along the real length (default) or along one of the global coordinate axis by specification of the appropriate value for REF.

3.22 ADDM – General Matrix Element

See also: BOUN, SPRI, FLEX, GRP

ADDM

Item	Description	Unit	Default
NO	Element number	–	!
TYP	Element type FLEX Flexibility matrix STIF Stiffness matrix DAMP Damping matrix MASS Mass matrix	*LIT*	!
PER	Period for impedance	*sec*	-
NO1	node number 1	–	!
NO2	node number 2	–	-
P	Component of force or moment PX Force $[kN]_{1151}$ PY Force $[kN]_{1151}$ PZ Force $[kN]_{1151}$ MX Moment $[kNm]_{1152}$ MY Moment $[kNm]_{1152}$ MZ Moment $[kNm]_{1152}$ MB Bimoment $[kNm2]_{1105}$	*LIT*	!
UX	Value for displacement direction u-x	*	0
UY	Value for displacement direction u-y	*	0
UZ	Value for displacement direction u-z	*	0
UXX	Value for rotational direction u-xx	*	0
UYY	Value for rotational direction u-yy	*	0
UZZ	Value for rotational direction u-zz	*	0
UW	Value for distortion u-w	*	0

ADDM can be used for the input of any element matrices or supports (e.g. pile trestle) with up to six nodes. Larger matrices may be defined via sub-matrices. An element or sub-element consists of several FLEX records with the same element number. There is no need to define symmetric or zero entries. The following variants exist:

1. Flexibility matrix (NO2=0)
   For each unit load with direction 'P', the displacements are input as affected components. The unit of the unit load is defined by the implicit unit SUPP_POINT, SUPP_MOMENT or BEAM_BIMOMENT and cannot be selected otherwise. The values UX to UW thus are deformations, but have to be scaled for the unit of the unit load. Components with diagonal terms 0 are not processed, rigid supports must be defined by means of nodal constraints.
2. Stiffness matrix

In each line one row or one column of the sub-matrix of the nodes NO1-NO2 is defined. The unit of the values is now defined by the selection of the literal P, but the values have to be scaled for each column according the deformations GEO_DEFORMATION, GEO_ROTATION or GEO_DISTORTION. No check is made for whether the matrix is ”positive definite”.

3. Damping matrix
   In each line one row or one column of the sub-matrix of the nodes NO1-NO2 is defined. The unit of the values is now defined by the selection of the literal P, but the values have to be scaled for each column according the velocities VELOCITY, A_VELOCITY or W_VELOCITY.
4. Mass matrix
   In each line one row or one column of the sub-matrix of the nodes NO1-NO2 is defined. The unit of the values is now defined by the selection of the literal P, but the values have to be scaled for each column according the accelerations ACCELERATION, A_ACCELERATION or W_ACCELERATION.

Frequency dependant matrices (Impedance) are not yet processed.

3.23 FLEX – General Elastic Element

See also: ADDM, BOUN, SPRI, GRP

FLEX

Item	Description	Unit	Default
NO	Element number	–	!
NO1	Node number 1	–	!
NO2	Node number 2	–	0
P	Loading direction	*LIT*	!
	PX Force kN		
	PY Force kN		
	PZ Force kN		
	MX Moment kNm		
	MY Moment kNm		
	MZ Moment kNm		
	MB Bimoment $kNm2$		
UX	Displacement due to unit load	$[mm]_{1003}$	0
UY		$[mm]_{1003}$	0
UZ		$[mm]_{1003}$	0
UXX	Rotation due to unit load	$[mrad]_{1004}$	0
UYY		$[mrad]_{1004}$	0
UZZ		$[mrad]_{1004}$	0
UW	Warping	$[1/km]_{1005}$	0

FLEX can be used for the input of general elastic supports (e.g. pile trestle) for a single node. An element or sub-element consists of several FLEX records with the same element number, where for each unit load 'P' (in fixed units kn and m), the displacements are input as affected components. Components with diagonal terms 0 are not processed, and rigid supports must be defined by means of nodal constraints.

General stiffness, mass or damping matrices may be defined with record ADDM.

However there is still an obsoleted option to define a stiffness matrix with FLEX: By defining NR2 with a second node number, the values for an explicit row or column of the submatrix of node NR1-NR2 may be defined as stiffness valkues in (kN,m) or a matching explicit unit for every single item. A check for "positive definite" is not performed.

3.24 MASS – Concentrated Masses

MASS

Item	Description	Unit	Default
NO	Node number or Literal FIT / FITL	–/*LIT*	1
MX	Translatoric mass	[∗]·	0.
MY	(Hint for dimensions see below)	[∗]·	MX
MZ		[∗]·	MX
MXX	Rotational mass	[∗]·	0.
MYY	(Hint for dimensions see below)	[∗]·	0.
MZZ		[∗]·	0.
MXY		[∗]·	0.
MXZ		[∗]·	0.
MYZ		[∗]·	0.
MB	Warping mass	$[tm^4]$	0.
REF	Reference and persistence of the masses TEMP Temporary global mass GLOB Global coordinate system LOCA Local coordinate system	*LIT*	GLOB
LC	Load case from the CDB (see IMPO)	–	!
PRZ	Percentage of permanent load for mass PSI0,PSI1,PSI2 (= combination value)	*LIT*/–	100
SELE	Selection of a load and load direction PG Nodal loading in gravity direction PGB Beam loading in gravity direction ... see remarks	*LIT*	PG
NA	Start node for FIT	–	-
NE	End node for FIT	–	-

Masses are mainly used in dynamic analysis. The masses defined here will have assigned the current group number. The unit of masses is for single masses $[t]_{1180}$resp.$[tm^2]_{1182}$ and for distributed masses $[t/m]_{1181}$resp $[tm^2/m]_{1183}$.

Temporary masses may be also created by ASE and DYNA, old values will automatically deleted with a redefinition. Persistent masses will be accumulated with a restart, but may be deleted with a MASS DEL command.

A translatoric mass usually acts equally in all three coordinate directions, they should therefore be input for all three directions. Rotational masses however have a clear rotation axis and if

this axis is inclined we get off diagonal terms for the mass matrix, which can be used only for a fully consistent mass matrix.

For dynamic analysis the self-weight of the entire structure is always converted to masses. If this is not intended, the user has to define the self-weights of the materials as zero. Additional masses defined with MASS will also trigger additional loads for automatic self-weight loading of statical load cases unless defined as REF TEMP.

For the correct Eigenvalues it is generally necessary to add masses from variable loading. It is recommended to define them based on static load cases within ASE / DYNA with their MASS command or with SOFiMSHA and a restart as additional masses. It is possible to convert nodal loads from any load case to mass entries with a given percentage of the loading. The most useful default is given by the quasi permanent combination value ψ_2. The definition of a literal for PRZ will select the combination value from the imported load case, or if this value is pointing to the action, the value of the action of the main project is taken as factor.

SELE defines a Filter on the loads to be converted. Other valid literals are: PXX, PYY, PZZ for nodal loads; PXXB, PYYB, PZZB for beam loads in global directions; PXB, PYB, PZB for beam loads in local directions. For nodal loads, all generated loads from other element load definitions will be included, if the load case has been analyzed before. For PG and PGB only those loads acting really in the direction of gravity will be converted. For beam loads, the defined excentricities will be squared to establish the rotational inertia for the torsion using the optional factor MXX.

For special cases it is possible to define explicit further factors via entries MX to MB with the unit [-]. If no unit is defined, the factor is taken as it is, but then the user has to take care of a correct SI-transformation factor from loads to masses or even rotational masses. A very special case is the generation of negative masses to account for holes. This may be accomplished with the Literal PGS or PGSB for **SELE**.

For a **FIT** all masses are defined per length of the Fit, thus in [t/m] or [tm^2/m]. For axis symmetric systems values are usually defined per arc length: Masses are in [t/m] or [tm^2/m], distributed Masses in [t/m^2] or [tm^2/m^2]. To obtain the same dimensions the given values will therefore be multiplied with the radius.

3.25 SBOX – Special selections

See also: DEL, MOD, TRAN, MIRR

SBOX

Item	Description	Unit	Default
A1X	First axis of selection	$[m]_{1001}$	*
A1Y	from point (A1X,A1Y,A1Z)	$[m]_{1001}$	*
A1Z	to point (B1X,B1Y,B1Z)	$[m]_{1001}$	*
B1X	or: GPT nnn for the node nnn	$[m]_{1001}$	*
B1Y		$[m]_{1001}$	*
B1Z		$[m]_{1001}$	*.
A2X	Second axis of selection	$[m]_{1001}$	*
A2Y	from point (A2X,A2Y,A2Z)	$[m]_{1001}$	*
A2Z	to point (B2X,B2Y,B2Z)	$[m]_{1001}$	*
B2X	or: GPT nnn for the node nnn	$[m]_{1001}$	*
B2Y		$[m]_{1001}$	*
B2Z		$[m]_{1001}$	*.
A3X	Third axis of selection	$[m]_{1001}$	*
A3Y	from point (A3X,A3Y,A3Z)	$[m]_{1001}$	*
A3Z	to point (B3X,B3Y,B3Z)	$[m]_{1001}$	*
B3X	or: GPT nnn for the node nnn	$[m]_{1001}$	*
B3Y		$[m]_{1001}$	*
B3Z		$[m]_{1001}$	*.
R	optional radius	$[m]_{1001}$	-
T	optional thickness	$[m]_{1001}$	-
OPT	Selectional option for secondary groups AND must be in all SBOX OR must be in at least one SBOX NOT must not be in that SBOX POL Polygon definition PAND Polygon with Option AND POR Polygon with Option OR PNOT Polygon with Option NOT	*LIT*	OR

With SBOX it is possible to define a geometrical selection for secondary groups or the following commands DEL, MOD, TRAN or MIRR :

- A rectangular bric with minimum and maximum coordinates (A1X-B1Z)

- A sphere via definition of R and the centre (A1X, A1Y, A1Z)
- A cylinder via definition of radius R and the first axis (A1X to B1Z)
- A general parallelepiped (spar) defined by three independent axis:

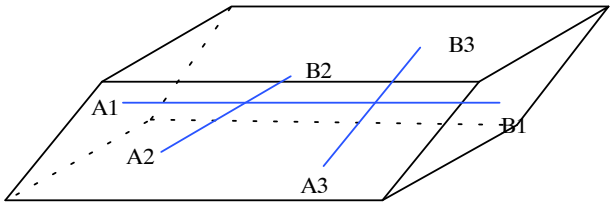

Figure 3.35: A general parallelepiped (spar)

- A skewed plane defined by the first and second axis (A1X to B2Z) and the thickness T perpendicular to the plane.
- A plane polygon with a constant thickness, described by multiple records with OPT POL, each having up to 10 coordinates (further items are A4X to B5Z) with the same thickness and a final SBOX record with a different OPT.

If no values are defined, the current selection will be deleted. If no radius is defined the three axis will be predefined with the extreme values for the three global coordinate directions, where the third axis is always the gravity direction for spatial systems and the z-axis for planar systems. These defaults allows a very easy definition of a vertical wall by only two points (A1,B1) and a thickness.

For SBOX all coordinates may be defined also with GPT nnn as those of node nnn. Unless stated otherwise, for the selection of elements it is required that all nodes have to be inside the SBOX to flag the element to be inside the SBOX.

Multiple SBOX definitions will be accumulated with logical operations. The remain active until a redefinition after an application of the SBOX with DEL, MOD, TRAN or MIRR. If the definitions should be deleted only, an empty record SBOX will do the job.

Examples:

```
SBOX   A1Y 0.0 B1Y 10.0 T 0.1 $ along a line

SBOX   1.50 1.50 0.00 $$ Polygon in one record
       8.50 1.50 0.00 $$
       8.50 7.00 0.00 $$
       1.50 7.00 0.00 OPT PAND

TRAN   application of the first two SBOX Definitions

SBOX   0.0  0.00 0.00 OPT POL $ in multiple records
       0.0 10.00 0.00 OPT POL
       0.0 10.00 8.00 OPT POL
       0.0  0.00 8.00 OPT PAND

TRAN   application of the third SBOX Definition
```

3.26 DEL – Delete Elements

See also: MOD, TRAN, MIRR, SBOX

DEL

Item	Description	Unit	Default
TYPE	Type to be deleted:	*LIT*	!
FROM	First number	–	1
TO	Last number	–	*
INC	Increment of selection numbers or GRP	–/*LIT*	1
XMIN	A selection box	$[m]_{1001}$	*
YMIN	Only elements which lie entirely inside	$[m]_{1001}$	*
ZMIN	this box will be deleted.	$[m]_{1001}$	*
XMAX		$[m]_{1001}$	*
YMAX		$[m]_{1001}$	*
ZMAX		$[m]_{1001}$	*.

With DEL it is possible to delete existing elements at the end of the program run. Nodes however may not be deleted.

The following types are possible:

KINE	Kinematic Constraints of nodes
BEAM	Beam elements
TRUS	Truss elements
CABL	Cable elements
SPRI	Spring elements
QUAD	Shell elements
BRIC	Volume elements

As a DEL sets only markers, which are processed at the end of the program run, the deleted elements remain active until then and will be active during all processing steps (e.g. TRAN). Even for a selection using a window or a SBOX, DEL sets only markers on the element numbers. Thus the usage for dynamic groups with a negative group divisor is severely restricted. In all those cases, where these limitations become relevant, a definition with several blocks and a SYST REST has to be used.

The element selection and definition of a selective box is done as described in record TRAN.

3.27 MOD – Modify

See also: DEL, TRAN, MIRR, SBOX

MOD

Item	Description	Unit	Default
TYPE	Type to be modified:	*LIT*	!
FROM	First number	–	1
TO	Last number	–	*
INC	Increment of selection numbers or GRP	–/*LIT*	1
XMIN	A selection box	$[m]_{1001}$	*
YMIN	Only elements having their centre within	$[m]_{1001}$	*
ZMIN	that BOX will be modified	$[m]_{1001}$	*
XMAX	Further more general geometric selections	$[m]_{1001}$	*
YMAX	may be defined with record	$[m]_{1001}$	*
ZMAX	SBOX beforehand.	$[m]_{1001}$	*.
FIX	Support Condition	*Lit*	-

With MOD it is possible to change the support conditions of nodes or the properties of existing elements. The properties of the elements selected will be modified according to the last element record with property attribute PROP.

However for nodes only support conditions may be added with FIX. Compared with a direct definition with record NODE, the benefits of MOD are mainly the provision of geometric attribute volumes.

The following types are possible:

NODE	support conditions for nodes
BEAM	Beam elements
TRUS	Truss elements
CABL	Cable elements
SPRI	Spring elements
QUAD	Shell elements
BRIC	Volume elements

With following input for example the element thickness is modified to 22 cm only for the QUAD elements No. 1 till 155:

```
QUAD PROP T 0.22
MOD QUAD FROM 1 TO 155
```

The element selection and definition of a selective box is done as described in record TRAN.

Hints:

- MOD may only change existing data, it is not possible to generate any new data structures. Thus a change of beam subdivisions (BEAM PROP DIV nn) is only possible with a TRAN or MIRR command.
- Properties are organized in groups, which may be changed only in total. For example all thickness values or all definitions for the local coordinate system define a group each. A definition of DROT only will thus create a new standard orientation although rotated by DROT.

3.28 TRAN – Transformations

See also: DEL, MOD, NODE, MIRR, SBOX

TRAN

Item	Description	Unit	Default
TYPE	Type to be transformed, see remarks for allowed types.	*LIT*	ALL
FROM	First number	–	1
TO	Last number	–	*
INC	Increment of selection / FIT / GRP	–/*LIT*	1
DNO	Increment for target numbers (0/n/SELF)	–/*LIT*	0
DNON	Increment for element node numbers	–	0
WIDE	Selection range	*	0.0
XMIN	Selection with a box in global coordinates	$[m]_{1001}$	-
YMIN	only elements completely with the box	$[m]_{1001}$	-
ZMIN	will be transformed	$[m]_{1001}$	-
XMAX	Further more general geometric selections	$[m]_{1001}$	-
YMAX	may be defined with record	$[m]_{1001}$	-
ZMAX	SBOX beforehand.	$[m]_{1001}$	-
PROP	Property filtering / Special options	*LIT*	OLD
FIX	Support condition filter	*LIT*	-
DX	Translation in X-direction	$[m]_{1001}$	0.
DY	Translation in Y-direction	$[m]_{1001}$	0.
DZ	Translation in Z-direction	$[m]_{1001}$	0.
PHIX	Rotation angle about x-Axis	$[\circ]_5$	0.
PHIY	Rotation angle about y-Axis	$[\circ]_5$	0.
PHIZ	Rotation angle about z-Axis	$[\circ]_5$	0.
ALPH	Precision or meridian angle	$[\circ]_5$	0.
BETA	Rotation angle	$[\circ]_5$	0.
THET	Nutation or descent angle	$[\circ]_5$	0.
REFX	Reference point of rotation	$[m]_{1001}$	0.
REFY		$[m]_{1001}$	0.
REFZ		$[m]_{1001}$	0.
FACX	Scaling factors to reference point	–	1.
FACY		–	1.
FACZ		–	1.

With TRAN and MIRR it is possible to generate new nodes and/or elements by rotating and translating respective mirroring existing ones from any database (see IMPO) .

The most simple transformation is a scaling and displacement only. If rotations are added, the sequence of the operations becomes important. A simple general rotation method is the simultaneous incremental rotation by a rotation tensor (see theoretical principles). The definition of ALPH NORM a normalization based on the tangent values is selected which is easier to use in most cases, but is not unique for some angles with 90 degrees.

$$\begin{vmatrix} 1-(\Phi_y^2+\Phi_z^2)\cdot CC & \Phi_z\cdot sin\psi+\Phi_x\Phi_y\cdot CC & -\Phi_y\cdot sin\psi+\Phi_x\phi_z\cdot CC \\ -\Phi_z\cdot sin\psi+\Phi_x\Phi_y\cdot CC & 1-(\Phi_x^2+\Phi_z^2)\cdot CC & \Phi_x\cdot sin\psi+\Phi_y\Phi_z\cdot CC \\ \Phi_y\cdot sin\psi+\Phi_x\Phi_z\cdot CC & -\Phi_x\cdot sin\psi+\Phi_y\Phi_z\cdot CC & 1-(\Phi_x^2+\Phi_y^2)\cdot CC \end{vmatrix}$$

$$\psi^2=\phi_x^2+\phi_y^2+\phi_z^2$$

$$\Phi_x=\frac{\phi_x}{\psi}\ ;\ \Phi_y=\frac{\phi_y}{\psi}\ ;\ \Phi_z=\frac{\phi_z}{\psi}\ ;\ CC=1-cos\psi$$

If only one angle is given, the special case of a planar rotation is obtained as special case. Only the angle PHIZ and the displacements DX, DY are used in planar cases.

Instead of this matrix one may use the so called Eulerian angles ALPH, BETA and THET. Any rotation in the three-dimensional space consists then of three individual components:

1. Rotation ALPH about the original gravity direction,
2. Rotation THET about the new first horizontal axis,
3. Rotation BETA about the new gravity direction.

The scaling factors may be selected in all three coordinate directions, They will be applied relative to the reference point before the rotational transformation. A transformation with the literal PROF for FACX projects the nodes into the plane including the reference point and the direction (DX, DY, DZ).

The following types are possible:

NODE	Nodes only
EDGE	Nodes of an edge (list of nodes or structural line)
KINE	Kinematic Constraints of the selected nodes only
BEAM	Beam elements & nodes
TRUS	Truss elements & nodes
CABL	Cable elements & nodes
SPRI	Spring elements & nodes
QUAD	Shell elements & nodes
BRIC	Volume elements & nodes
ALL	All elements and nodes

The numbers of the nodes or elements to be transformed are selected via a range FROM TO INC. Without any definition all elements are selected, if a value for FROM is given, the default value for TO is the same number. With a definition of INC GRP the numbers are treated as group numbers.

With the type EGDE an already defined sequence of nodes may be copied and will be memorized as a new sequence. If only the FROM value is given, the edge with that number is addressed, if both values are given, the sequence of the edge between those nodes is chosen.

The number of a transformed element is the source number plus DNO. By entering DNO 0 the new numbers of elements or nodes are automatically assigned. With DNO SELF the node and element numbers will not be changed for an import. For a transformation within the project data base, option SELF is only allowed for a node selection, as long as no elements have been defined yet, and only before any system restart occurs.

The group number of the elements remain unchanged if GRP 0 is selected, otherwise the elements will be reassigned to the currently selected group. Therefore it is not possible to shift elements to a different group with a DNO value.

New nodes of the elements will be generated automatically. With an explicit definition of DNON the new nodes will have a distinct offset to their old node if the old node has been defined explicitly. Generated nodes will be either mapped to existing nodes or receive new generated node numbers aobove the current upper limit number (see CTRL NODE).

For a translation it is possible to select the elements to be copied by defining a value for WIDE. Only those elements will be copied then, which are fully in the interval defined by the reference point and the distance wide in the translation direction. Positive values define a region behind the reference point, negative values define a region before the reference point.

The properties of the elements will be kept in general from the original (OLD). However it is possible to select element classes which will receive the current defined element properties:

NEW	all element types
OLD	no element types, delete defaults
B	beam elements
T	truss elements
C	cable elements
Q	QUAD elements
H	BRIC elements

To simplify the input definition there is one exception. If a PROP has not yet been used, it will be activated for the first following TRAN. For all other following TRAN the default will be OLD again.

The local coordinate systems of the BEAM and QUAD elements will be transformed in the same way, however it is possible to specify with a BEAM or QUAD PROP-record an explicit direction via KR or a vector DRX to DRZ and an additional rotation which is applied on the newly generated coordinate system and NOT on the original coordinate system. Directions of springs will be recalculated in all cases, thus explicit directions have to be specified with a PROP-record.

Support conditions are created via a filter, i.e. any new node will receive support conditions only which are common to the original node and the support filter FIX. (Logical AND)

Last not least, it is also possible to use TRAN and MIRR to generate elements by an extrusion, i.e. the original nodes and the transformed nodes will be combined to a higher type of element with the currently defined properties. If desired, a subdivision of that extrusion may be performed. This is input via the item PROP and the input value Xnnn, where nnn is either an optional number for a uniform subdivision or the literal FIT. The latter case the item FIX is used to define:

- a number of an EDGE respective a structural line
- a @ followed by the number of a structural line if the original coordinates should be taken as local coordinates.
- a negative number of a structural line if the local coordinate system of the edge is not to be used.
- two nodes of a fit or an edge in the format node1:node2

The FIT of those nodes defines the position of the extruded nodes in the way that all elements are taken relative to the reference point (REFX, REFY ,REFY, default is the origin for FIX, first node of the FIT for PROP YFIT) and copied and optionally rotated to each node of the nodal sequence. For a pure EDGE the software will detect circular arcs automatically if there are at least three points available within the fit.

Finally, PROP XDGM may be used to extrude a Digital Ground Model (DGM) along the gravity direction, given a reference top bounding surface, in order to create an air-volume model, as is often required in CFD analysis workflows. For example, the following input will create a volume between surfaces with group 10 and 20, following the subdivision of an existing nodal sequence between nodes 1 and 2.

```
TRAN QUAD GRP 10 20 PROP XDGM 1:2
```

For TYPE there are then only four possibilities allowed with an extrusion:

NODE	each selected node triggers a beam element
EDGE	an edge yields QUAD elements
BEAM	Beam elements trigger QUAD elements
QUAD	QUAD-elements trigger BRIC-elements

The geometric reference number of the extruded QUAD and BRIC elements will be created from the element number of the original element according to the settings of CTRL EXTR.

When extruding a point, truss or cable elements will be created if a PROP record of TRUS or CABL type is preceding the TRAN record.

3.29 EXTR – Extrusion and sweeping of elements

See also: TRAN, LOFT

EXTR

Item	Description	Unit	Default
TYPE	Type of element to be extruded (see below)	*LIT*	!
FROM	Selector or start index GRP Selection by group EDGE Selection by nodal sequence ID SLN Selection by structural line ID SAR Selection by structural area ID	*	!
TO	Id of selector or end index	*	FROM
INC	Increment	–	1
PATH	Extrusion path DIR Straight extrusion along direction EDGE Extrusion along nodal sequence FIT Extrusion between two points SLN Extrusion along a structural line	*LIT*	!
V1	First item	*	!
V2	Second item	*m*	-
V3	Third item	*m*	-
DIV	Number of subdivisions	–	-
SREF	Reference node on source	–	-
OPT	Extrusion options R Rotate source (only PATH SLN)	*LIT*2	-
SNAP	Connect to existing nodes YES NO TOPO Prefer topologically related	*LIT*	YES
FLIP	Invert z-axis of generated QUADS (3D systems) YES NO	*LIT*	NO

This record allows to create elements by extruding or sweeping a set of selected source elements to new elements of a higher dimension. For example, nodes can be extruded to beam elements, beams or nodal sequences can be extruded to quad elements and quads to bric elements. The properties of the elements generated during extrusion can be defined by preceding property initialization records, e.g. `GRP NO 1 REF 10`, `QUAD PROP MNO 2`.

The type of the source elements is defined at parameter TYPE. The following table summarizes all available options as well as the resulting type of elements:

Option	Type of source element	will be extruded to
NODE	Nodes	Beam elements
NODT	Nodes	Truss elements
NODC	Nodes	Cable elements
FIX	Nodal constraints	Layers of nodal constraints
KINE	Kinematic dependencies	Layers of kinematic dependencies
SPRI	Spring elements	Layers of spring elements
EDGE	Nodal sequence	Quad elements
BEAM	Beam elements	Quad elements
SLN	Structural line	Quad elements
QUAD	Shell elements	Bric elements
SAR	Structural area	Bric elements

The source elements can be selected using parameters FROM, TO and INC, by a range of element numbers, a group number or the ID of the hosting structural element, if applicable. Especially for spring elements, it is enough that only one of the spring nodes belongs to a nodal sequence or structural line, in order to be selected. Whenever parameter FROM is a literal, then the selection ID is given in parameter TO and parameter INC is not taken into consideration. The following table summarizes the valid selection combinations for each source element type:

TYPE	FROM	TO
NODE	–	–
FIX	– / EDGE / SLN	– / –, *LIT*4 / –
KINE	– / EDGE / SLN	– / –, *LIT*4 / –
SPRI	– / GRP / SGRP / EDGE / SLN	– / – / *LIT*4 / –, *LIT*4 / –
EDGE	– / *LIT*4	–
BEAM	– / GRP / SGRP / EDGE / SLN	– / – / *LIT*4 / –, *LIT*4 / –
SLN	–	–
QUAD	– / GRP / SGRP / SAR	– / – / *LIT*4 / –
SAR	–	–

Hint

Temporary source elements, such as spring elements or couplings, acting only as a template for the extrusion, should be deleted after the extrusion with a separate DEL command, or excluded from a subsequent analysis.

A linear extrusion path can be defined using PATH DIR. In this case, the direction and length of the extrusion is entered as a vector in parameters V1, V2 and V3. Alternatively, an extrusion path definition using an existing nodal sequence or structural line is possible, with the use of PATH EDGE / FIT / SLN and an ID at V1. The extrusion start- and end-node depend on the orientation of the path, as it has been defined. It is possible to invert this orientation using a minus (-) symbol at the value of V1.

Parameter DIV defines the number of subdivisions or layers along the extrusion path. In the case that the extrusion path is defined by EDGE / FIT / SLN, parameter DIV is optional, while for PATH DIR it is required. In the first case, if DIV is not provided, the number of subdivisions is defined by the sequence of nodes along the line or the edge.

By default, the extrusion starts at the position of the source elements, even if the extrusion path is not connected to the source elements. This behavior can be changed by setting the number of a reference node on the source, at parameter SREF. In this case, the elements of the source are first copied to the start-point of the extrusion path, such that the reference point coincides with the start-point.

The orientation of the source elements is kept along the extrusion by default. For an extrusion along a structural line, this can be changed by setting parameter OPT to R. In this case, the source elements are rotated according to the local coordinate system along the structural line.

3.29.1 SNAP

Finally, parameter SNAP offers the possibility to control whether the generated elements will be attached to existing nodes of the system, in case the node positions coincide. Otherwise, this parameter has no effect.

Option YES will use a detected node at the computed coordinates, giving priority to the one most recently created. However, if a path with explicitly specified node numbers is given, e.g. EDGE, SLN, then a coinciding path node is prefered, so that the new elements are attached to the nodes of the path.

Option NO will unconditionally force the generation of new nodes.

Option TOPO will give priority to a node which, in the existing system, is directly connected, i.e. through a finite element, with the corresponding node used in the previous extrusion layer. If no such a node exists, then the behaviour is the same as with SNAP YES.

This option may be useful when extruding unconnected elements, with coinciding nodes, and it is desirable that the new extruded elements remain unconnected. Or in a similar case where, however, 0-length spring elements are extruded inbetween. Depending on the overall system size, option TOPO may be computationally demanding and, thus, should be reserved only for special cases.

3.29.2 Spring Properties

The properties of the generated spring elements can be defined in a preceding SPRI PROP record. In case such a definition does not exist, every new spring will inherit the properties of its corresponding source spring. The Reference Area AR is an exception, as it will always be automatically computed for every spring, based on the type (linear / areal) and geometry of the extrusion.

Hint

IMPORTANT: Selecting source springs FROM EDGE / SLN will result to an areal bedding, while selecting springs by number or by group will result to a separate linear bedding for every source spring. The correct computation of the Reference Area depends on that. It is recommended that the properties of the generated spring elements are always validated, to ensure they are the intended ones.

3.29.3 Examples

The following example shows an extrusion of the quad elements of group 1 to brics along a straight path defined by a vector:

```
GRP 10
BRIC PROP MNO 1
EXTR TYPE QUAD GRP 1 PATH DIR 0 0 5.0 DIV 10
```

Ten layers of bric elements will be generated along the extrusion path. The group number as well as the properties of the new bric elements are defined in advance.

Extrusion of all quad elements in group 1 to brics along structural line no 5.

```
EXTR TYPE QUAD GRP 1 PATH SLN 5 OPT R
```

The structural line has been defined in a previous SOFiMSHC run (see SOFIMSHC: SLN). The subdivision of the extrusion matches the sequence of nodes generated along the structural line. Each extrusion layer will be rotated according to the local coordinate system of the line.

Extrusion of spring elements on a linear support, along structural line 1, to 10 layers of spring elements in vertical direction:

```
EXTR TYPE SPRI SLN 1 PATH DIR 0 0 5.0 DIV 10
```

The spring elements will automatically be connected with already existing nodes of quad, bric or beam elements. The reference area of the resulting springs is taken by the corresponding source springs and will be scaled according to the path subdivision, yielding an areal support on the extrusion surface.

3.30 LOFT – Lofting / Interpolation

See also: TRAN, EXTR

LOFT

Item	Description	Unit	Default
TYPE	Type of source/target element	*LIT*	!
	EDGE Sequence of nodes		
	SLN Structural line		
	QGRP Group of quads		
	SAR Structural area		
IDSC	ID of source	*	!
IDTG	ID of target	*	!
REFS	Reference node on source	–	-
REFT	Reference node on target	–	-
DIV	Number of subdivisions	–	-
OPT	Interpolation options	*LIT*3	EQ
	- Linear interpolation if no further information provided		
	E Detect connecting nodal sequences / edges / structural lines		
	Q Detect connecting QUAD elements		
	B Detect adjacent faces of BRIC elements		

This record allows the generation of quad or bric elements by lofting between a source (IDSC) and a target (IDTG) curve or area.

A quad mesh can be created by lofting between a source and a target curve (TYPE EDGE / SLN).

A bric mesh can be created by lofting between a source and a target quad mesh (TYPE QGRP / SAR). In both cases, the source and the target mesh must be topologically similar, such that each element on the source can be associated with an element on the target.

The generation of topologically similar nodal sequences on curves or quad meshes can be enforced by coupling the respective structural entities in a previous SOFiMSHC run. See SOFIMSHC: SLNS and SOFIMSHC: SARS for further information. Parameters REFS and REFT can be optionally used to help auto-detect and establish such an association.

By default, the nodes of the intermediate layers will be interpolated linearly between the source and the target mesh. The resulting elements will always snap to any existing elements with coinciding nodes.

Parameter OPT can be any combination of E, Q and B. Option E enables the detection of connecting nodal sequences or structural lines, the subdivision and geometry of which will be used as lofting guide curves. Accordingly, Q and B enable the detection of existing QUAD elements and faces of BRIC elements, between the source and the target, that the new elements will be attached to. The option can be deactivated by setting OPT -.

When OPT E is enabled, the program will try to detect a correspondence between the nodes on the target and the nodes on the source mesh, based on the existence of connecting edges / structural lines. In case this is not possible, the user can always establish a correct association through REFS and REFT.

The number of subdivisions between the source and target meshes is automatically set, when using OPT E and a connecting edge / structural line is detected. If more than one connecting edges exist, the subdivision of the first detected edge is considered, and the remaining edges are not used at all. The user may also specify an number of subdivisions manually, using parameter DIV. Once again, only detected edges that match the specified DIV will be used.

Note: OPT B may be computationally demanding and its use can in most cases be avoided: The resulting elements will always attach to coinciding existing nodes, including those of BRIC faces. The presence of connecting edges / structural lines and possibly quads, between the source and target meshes, is usually enough to guide the loft operation in the desired way.

3.30.1 Examples

Generation of bric elements between the two structural areas 1 and 2:

```
GRP 10
BRIC PROP MNO 1
LOFT TYPE SAR 1 2 DIV 10 OPT E
```

The two structural areas 1 and 2 have been coupled in a previous SOFiMSHC run using command SOFIMSHC: SARS, in order to enforce a topologically similar subdivision of quad elements between the two surfaces. Ten layers of bric elements will be generated between the two surfaces. The group number as well as the properties of the new bric elements are defined in advance. Only structural lines with 10 segments will be used as guiding curves, if detected. No reference nodes are provided on the source and target surfaces, so a topological association may fail if no connecting structural lines of 10 segments are detected.

3.31 MIRR – Mirroring

See also: DEL, MOD, TRAN, NODE, SBOX

MIRR

Item	Description	Unit	Default
TYPE	Type to be transformed:	*LIT*	ALL
FROM	First number	–	1
TO	Last number	–	*
INC	Increment of selection numbers	–/*LIT*	1
	GRP FROM and TO are groups		
	FIT generated sequence of nodes		
DNO	Increment for target numbers (0/n/SELF)	–/*LIT*	0
DNON	Increment for element node numbers	–	0
WIDE	Selection of region	$[m]_{1001}$	0.0
XMIN	Selection with a box in global coordinates	$[m]_{1001}$	-
YMIN	only elements completely with the box	$[m]_{1001}$	-
ZMIN	will be transformed	$[m]_{1001}$	-
XMAX		$[m]_{1001}$	-
YMAX		$[m]_{1001}$	-
ZMAX		$[m]_{1001}$	-
PROP	Property filtering	*LIT*	OLD
FIX	Support condition filter	*LIT*	-
A	Constants defining the mirroring	–	0.
B	plane with	–	0.
C	A·x + B·y + C·z = DIST	–	0.
DIST		$[m]_{1001}$	0.
MP1	or three node points in the	–	-
MP2	mirroring plane	–	-
MP3		–	-
FAC	Scaling factor	–	1.0

With MIRR it is possible to generate new nodes or elements by mirroring existing ones from any data base. The mirroring uses a general plane in 3D (not an axis which is only valid in 2D). The equation is of general type, but we recommend to use the Hessian form where:

(A,B,C) = Normal vector of the plane with length of 1.0
DIST = Distance of the plane to the origin
Hint: GENF used the general canonical equation of

the mirror plane with D = -DIST.

An other common definition is via the axis interceptions (D=1.0):

$$\frac{x}{a} + \frac{y}{b} + \frac{z}{c} = 1 \quad \Longrightarrow \quad A = \frac{1}{a} \;\; ; \;\; B = \frac{1}{b} \;\; ; \;\; C = \frac{1}{c}$$

The dimensional units for the input (PAGE UNII) will be applied in that case to the values A to C, otherwise on value D.

last not least we have the possibility to define the plane by three already defined nodes in the plane.

For simpler cases only some of the coefficients need to be supplied. e.g:

```
S:  y = 3.0          B = 1.0, DIST = 3.0
```

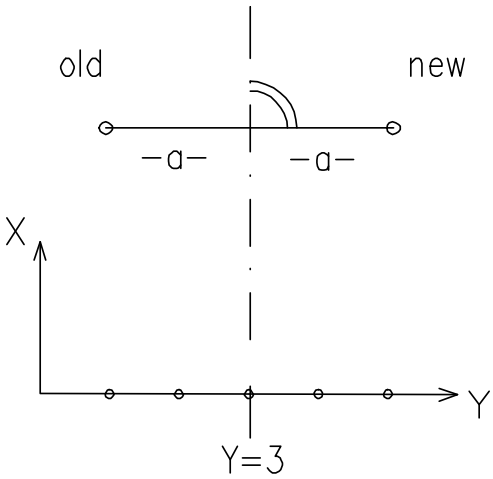

Figure 3.36: Mirror plane

The distance a of the mirrored point may be scaled with an additional factor FAC.

For a mirroring it is possible to select the elements to be copied by defining a value for WIDE. Only those elements will be copied then, which are fully outside the interval defined by the distance WIDE to the mirroring plane reference point and the absolute distance WIDE. The default of 0.0 will therefore not mirror any elements intersecting the mirroring plane.

All other parameters are identical to those at TRAN.

3.32 UMSH – Unstructured Mesh Generation

See also: UBND

UMSH

Item	Description	Unit	Default
TYPE	Type of mesh QUAD 2D Mesh generation using quadrilateral elements TRI 2D Mesh generation using triangular elements TET 3D Mesh generation using tetrahedral elements	*LIT*	-
HMAX	maximum mesh size on edges (2D)	$[m]_{1001}$	*
PROG	Progression factor	–	1.25
SAR	Identifier of a structural area to work on (2D)	–	-

With the use of UMSH, an unstructured mesh generation in 2D / 3D is possible. This record is followed by a set of UBND records that define the geometry of the domain to be meshed.

The desired element type can be selected by setting TYPE to QUAD / TRI for a 2D mesh, consisting of quadrilateral / triangular elements, or TET for an unstructured 3D mesh generation, using tetrahedral elements. In the case of a volume mesh, the boundary surface of the domain must have been previously meshed, with quadrilateral or triangular elements.

The maximum element size is controlled by parameter HMAX. If not input is provided, the default HMAX is computed as the maximum edge length of the boundary curve (2D) or surface (3D). The progression factor PROG controls the ratio of the edge length of neigboring elements.

Finally, SAR is only applicable in 2D mesh generation and refers to a structural area that has been previously defined. With the use of SAR, the boundaries of the surface are automatically detected and, in this case, the use of UBND records is not necessary. This is the only suitable option for meshing non-planar surfaces, as the use of UBND records for 2D meshing assumes a planar geometry.

3.32.1 UBND – Boundary definition for UMSH

See also: UMSH

UBND

Item	Description	Unit	Default
TYPE	Type of boundary OUT External boundary IN Internal boundary (Opening) CONS Constraining edge (2D)	*LIT*	!
SEL	Type of selection NODE (2D) FIT (2D) EDGE (2D) QREF (3D) QGRP (3D) COOR (3D) AUTO Automatic detection of internal boundaries (3D, TYPE IN)	*LIT*	!
X Y Z	Internal point coordinates (SEL COOR)	$[m]_{1001}$ $[m]_{1001}$ $[m]_{1001}$	- - -
N1 ⋮ N32	List of selection identifiers	$*$ $*$	- -

With UBND, the boundary of a surface or volume is defined, that forms a domain to be meshed using UMSH. Multiple records are possible, that act additionally to the previous ones. Unless parameter UMSH SAR has been used, at least one UBND record, defining the outer boundary of the domain, is required for every mesh generation.

3.32.2 2D Mesh Generation

For 2D meshing, all nodes on the boundary must be co-planar, otherwise the mesh generation may fail or result to a distorted mesh. For non-planar surface meshing, UMSH SAR is available.

Option TYPE specifies whether it is an external (OUT) or internal (IN) boundary that is being defined. For 2D meshes, it is also possible to define constraining boundaries (CONS), for example prescribed nodes or edges.

A definition of a boundary is possible in various ways, through parameter SEL. In order to

define a 2D domain, a list of up to 32 nodes (per entry) on the periphery may be provided, by defining SEL NODE and providing the node numbers in the fields N1 – N32. Their input must be in the correct sequential order, while for TYPE OUT / IN it is assumed that they form a closed curve – no repetition of the first node at the end of the sequence is required. The boundary segments between the nodes are assumed to be linear. For constraining boundaries, TYPE CONS, individual nodes are considered, without forming a closed boundary.

An alternative option is the use of SEL FIT, which behaves similarly to SEL NODE, with the addition that a nodal sequence will be followed, if detected, instead of assuming no subdivision between the nodes.

Finally, with SEL EDGE a list of boundary edges may be provided, the identifiers of which – numbers or literals – are then specified via N1 – N32. In this case, the sequence of the edges is not important, as they are automatically sorted in a sequential node order. However they have to form a closed curve when defining an outer or inner boundary.

It should be noted that the combination of different SEL options for a 2D outer boundary is not possible. Multiple TYPE OUT entries will be taken into consideration, however they must all refer to the same type of boundary description.

Example 2D

```
GRP 10
QUAD PROP MNO 1
UMSH TYPE QUAD HMAX  0.5 PROG 1.5
UBND TYPE OUT  SEL  NODE N1  1  2  3  4 $ Outer boundary $
UBND TYPE OUT  SEL  NODE N1  5  6  7  8 $ Outer boundary (continued) $
$ UBND TYPE OUT  SEL  EDGE N1 11 12 13 14 $ $ Not possible $
UBND TYPE IN   SEL  NODE N1  5  6  7  8 $ First Hole $
UBND TYPE IN   SEL  EDGE N1 15 16 17 18 $ Second Hole $
```

3.32.3 3D Mesh Generation

For a 3D domain, the boundary surface may be defined by a list of structural area numbers, using SEL QREF, or group numbers, using SEL QGRP. In both cases, the QUAD elements belonging to the specified selection are considered as boundary elements of the volume. The QUAD elements may be triangular or quadrilateral and must form a closed surface. As opposed to 2D, different SEL options may be combined in order to define a 3D outer boundary.

If SEL QREF is used and only N1 is provided, an automatic volume detection will be attempted on the positive direction of the specified structural area, or to the negative one if the value of N1 is negative (SOFIMSHC: SAR). The detected boundary surface will be the one that encloses the minimum volume at the specified direction.

In a similar way, using SEL COOR, an automatic detection of a boundary surface is possible by providing the coordinates of a point that is internal to the defined volume (TYPE OUT) or void (TYPE IN). In this case, X, Y and Z must be defined. The detected volume is, again, the minimum possible.

All of the above options apply both in defining an outer (TYPE OUT) or an inner boundary (TYPE IN). Additionally, the automatic detection of all internal voids is also possible, after an external boundary has been defined, using TYPE IN SEL AUTO.

Hint

With the use of options COOR or AUTO, BRIC faces on the boundary of an existing adjacent volume are automatically detected. Therefore, the presence of QUAD elements at this region is not necessary.

Examples 3D

Definition of a volume with inner voids:

```
GRUP 10
BRIC PROP MNR 1
UMSH TYPE TET
UBND TYPE OUT  SEL  QREF N1 21 22 23 24 $ Outer boundary $
UBND TYPE OUT  SEL  QGRP N1  1  2  3  4 $ Outer boundary (continued) $
UBND TYPE IN   SEL  AUTO $ Detect inner voids automatically $
```

Definition of a volume by internal coordinate:

```
GRUP 11
BRIC PROP MNR 1
UMSH TYPE TET
UBND TYPE OUT  SEL  COOR X 0.1 0.1 0.1 $ Internal coordinate $
```

3.33 INTF – Generation of interfaces

See also: SPRI

INTF

Item	Description	Unit	Default
OPT	Options	–	-
	CONT Continuation record		
TYPE	Type of interface elements	*LIT*	SPRI
	SPRI		
REFT	Reference type	*LIT*	SAR
	SAR		
	QREF		
	QGRP		
NO	+/- Reference number	–	!
D	Interface offset	$[m]_{1001}$	-
MNO	Material number for interface elements	–	-
CP	Axial spring constant	$[kN/m^3]_{1097}$	0.0
CT	Lateral spring constant	$[kN/m^3]_{1097}$	0.0

Using record INTF it is possible to generate elements with bedding or coupling properties, on a structural area, known as interface elements. Technically, the QUAD elements of the specified structural area are decoupled from the surrounding structure and a layer of spring elements is introduced, in order to bind the corresponding nodes with the specified type of kinematic coupling.

This option is primarily intended for modeling contact conditions between or within volumes, such as the case of a retaining wall with its surrounding soil or the contact area between two materials. However, the cases of use are not limited to volumetric domains, since the generation of interface elements is also possible between the specified structural area and other types of adjacent elements, such as QUAD and BEAM elements.

In case that multiple areas are involved in the interface generation for one distinct volume, these interfaces must be generated simultaneously. This refers to areas that share common edges, forming a continuous surface, and the interface generation is performed on the same side of the surface. For this purpose, parameter OPT CONT must be used, in order to continue with the input of the following areas that form the common surface. The command execution is postponed as long as a new INTF OPT CONT record is added, or a different command is issued. However, the group of the generated springs is still allowed to be changed, by inserting a GRP record between the consecutive INTF records.

Parameter TYPE can be used in order to specify the type of interface elements. Currently, only spring elements are supported.

Parameter REFT is used to specify the way that the reference QUAD elements, at the interface position, will be selected.

Parameter NO is an identifier for the reference region or group, as specified by parameter REFT. A +/- sign can be used to select on which side of the QUAD elements the interface will be generated.

With parameter D, it is possible to specify the thickness of the interface layer, which currently forms a gap between the reference region and the detached elements, by shrinking the elements. This gap is mostly intended for mesh connectivity inspection, after the interface generation, and its presence in the computational model is generally not desired. It should be noted that the introduction of a gap may result in distorted, ill-conditioned elements.

Parameter MNO refers to a material number, to be used for the interface elements.

For spring elements, the material number determines their non-linear properties. Parameters CP and CT refer, respectively, to the axial and lateral spring constants. The direction and reference area of the spring elements are automatically computed.

3.34 RSET – Result Set

RSET

Item	Description	Unit	Default
ID	Identifier	$LIT4$	-
SET	Primary type of results	$LIT8$	!
ITEM	Specific item of results	$LIT8$	!
UNIT	Unit of results	$LIT8$	-
NO	Element number	–	-
NG	Group/Material number (optional)	–	-
X	Abscissa for beam elements	$[m]_{1001}$	-
OPT	Options	Lit	-
TITL	Designation	$LIT32$	-

This record defines a group of up to 255 results. This feature is useful for example to get support forces in different nodes and directions, where the corresponding values are required. As the record is very general, any result which is provided by a structural analysis case may be used, the possible SETs and ITEMs are defined in the **CDBASE.CHM** documentation. However results of design load cases are not available.

The most important sets are:

NODE	Nodal displacements and support reactions (N_DISP) UX, UY, UZ, URX, URY, URZ, URB, PX, PY, PZ, MX, MY, MZ, MB
BEAM	Beam forces and moments (BEAM_FOR) N, VY, VZ, MT, MY, MZ, MB, MT2, UX, UY, UZ, PHIX, PHIY, PHIZ, PHIW, MT3, PA, PT, PTY, PTZ
TRUS	Results of truss elements (TRUS_RES) N, V
CABL	Results of cable elements (CABL_RES) N, V, VQ, VTX, VTY, VTZ
SPRI	Results of spring elements (SPRI_RES) P, PT, PTX, PTY, PTZ, M, V, VT, VTX, VTY, VTZ, PHI
QUAD	Forces and moments of QUAD elements (QUAD_FOR) MXX, MYY, MXY, VX, VY, NX, NY, NXY resp. stresses of QUAD elements (QUAD_STR) SIGX, SIGY, TAU, SIGZ
QNOD	Forces and moments of QUAD nodes (QUAD_NFO) resp. stresses of QUAD nodes (QUAD_NST)
BRIC	Stresses of BRIC elements (BRIC_STR)

	SIGX, SIGY, SIGZ, TVXY, TVXZ, TVYZ
BNOD	Stresses of BRIC nodes (BRIC_NST)

A definition of a set is given by a headder record with the ID of the set itself, followed by multiple records with special IDs for every element which are needed to identify the result items in MAXIMA or ELLA.

It is possible to specify at SET a formula with up to 32 characters, using items of the same result set. A formula must always start with an equal sign '=' to be distinuishable from a text variable. If a text variable should be used as a formula, or other variables evaluated during the input this can be achieved with a preceeding tilde "~" instead. The expression has no unit by default, thus a UNIT should be always specified.

For any superposition it has to be considered that MAXIMA will work only on the value of the formula and ELLA cannot establish an influence line for a formula. In both cases the expression will be reevaluated after the superposition from the other items.

All IDs must start with a character, not a number.

```
RSET 'A1' TITL 'RESULT SET AXIS 1'
RSET 'P1' NODE PZ NO 11
RSET 'P2' NODE PZ NO 12
RSET 'V1' BEAM VZ NO 110001 X 0.0
RSET 'V2' BEAM VZ NO 110001 X 0.875
RSET 'A2' TITL 'RESULT SET AXIS 2'
RSET 'P1' NODE PZ NO 21
RSET 'P2' NODE PZ NO 22
RSET 'V1' BEAM VZ NO 210001 X 0.0
RSET 'V2' BEAM VZ NO 210001 X 0.875
RSET 'PP' '=P1+P2+SQR(V1**2+V2**2)' UNIT 'kN'
```

A record with RSET DEL deletes all definitions of result sets.

A record OPT S creates a new line in the result table if the space is available (maximum of 29 lines).

3.35 EXPO – Ansi Export of Data

EXPO

Item	Description	Unit	Default
OPT	Data to export	*–/LIT*	63
	1 Nodes and Constraints		
	2 Springs, Dampers and Boundaries		
	4 Beam, Cable and Truss Elements		
	8 Plane elements (QUAD)		
	16 Volume elements (BRIC)		
TO	Name of a file to write to	*Lit*96	*
PASS	Password of database	*Lit*16	-

With the record EXPO you may export the nodes and elements in the database to an input file for SOFiMSHA. This may be useful in special cases.

If the file name is not specified the data will be appended to the most recently defined file or a file with the name project_SYS.DAT is generated.

The units of the values will be set to the current setting of UNIE from record PAGE. The input language of the record and item names in the new file will be the same as the current CADINP input.

With the input OPT DOLG the finite volume mesh for the program DOLFYN will be generated (.DGE). As identifier for volumes and boundaries the primary group number will be used. For a 2D system the QUADs and their edges will be extruded to volumes and faces with a thickness of 1 m. There are the following options:

DOLG:PA	Create the primal mesh as ASCII-file (equivalent to the FE mesh)
DOLG:DA	Create the dual mesh as ASCII-file (this is the polyhedral mesh)
DOLG:PAT	Create also a VTK-File of the generated geometry
DOLG:DAT	Create also a VTK-File of the generated geometry
DOLG:PB	Create the primal mesh as binary-file (not yet supported)
DOLG:DB	Create the dual mesh as binary-file (not yet supported)

With the input OPT DOLF the files for the DOLFYN preprocessor will be generated (.VRT, .CEL, .BND). These are also required for thr VTK-Export in DOLFYN.

With the input OPT VTK it is possible to export a .VTK file, so that the system can be visualized with a third-party software. Currently, only surfaces can be exported.

3.36 IMPO – Import of Data

IMPO

Item	Description	Unit	Default
OPT	Data to import	$Lit32$	*
FROM	Name of a file to import	$Lit96$	!
PASS	Password of file	$Lit16$	-
DEFO	Load case for deformations	–	-
FACT	Factor for deformations	–	1.0
XREF	Reference point ordinate	$[m]_{1001}$	0.0
YREF	Reference point ordinate	$[m]_{1001}$	0.0
ZREF	Reference point ordinate	$[m]_{1001}$	0.0
PHIZ	Rotation	$[\circ]_5$	0.0

With the record IMPO you may import the nodes and elements as well as results of external files for SOFiMSHA. The following files are possible, being distinguished by their file extension:

- .CDB - an other data base
  This database is not imported, but is selected as source for the commands TRAN and MIRR. This allows for example the easy replication of structures from an external database. The import database remains active until another database is selected or a record with record name IMPO only switches back to the primary database. With DEFO a load case number may be selected. The deformations of that load case will be multiplied with FACT and added to the nodal coordinates during import.
- .STL - STEREOLITHOGRAPHY FORMAT

```
solid OBJECT
  facet normal -5.085132e-001 8.610542e-001 -4.779932e-005
    outer loop
      vertex 2.618444e+004 5.821683e+003 4.409577e+002
      vertex 2.618444e+004 5.821686e+003 4.433804e+002
      vertex 2.619336e+004 5.826951e+003 4.449860e+002
    endloop
  endfacet
endsolid
```

- .DGF - a WAMIT geometry file for low order method
  The faces of the body of the selected geometry file are imported. OPT defines an optional master node which is used as reference for all generated kinematic constraints of the generated nodes. (XREF,YREF,ZREF) are the global coordinates of the local origin of the imported body. PHIZ is an optional rotation of the local coordinate system.(see WAMIT Potential Control File).

- .FVI - FEMVIEW neutral postprocessing files
  (subset as generated from PHYSICA) The Hexahedral-Elements and nodes will be imported, as well as the results to be processed by SOFiSTiK (e.g. velocities, pressures, temperatures, displacements, stresses).

IOPT	0	Default of all Options
	1	Enforce a planar system (QUAD)
	2	Generate a load case for every time step

3.36.1 Generic Import Interface

With IMPO it is also possible to import very general data, including results, to the database. This generic import interface is reserved for use with import files, that are generated automatically by specifically developed and tailored software tools, e.g., for the purpose of visualisation of external data using SOFiSTiK postprocessors.

Hint

This is a low-level interface. No checks regarding quality and consistency of the imported data are carried out. Usage of this data within downstream SOFiSTiK processing workflows is not intended and not asserted.

- At OPT a literal is defined starting with the name of a structure described in the data base description (CDBASE.CHM) following with a slash and the load case number. Up to six default integer values may be added separated by a : character.
- At FROM an optional literal may be specified containing the list of the defined items separated by commas.
- The third literal is provided for additional options. The sequences MAX, MIN or MAMI will trigger the creation of those headder records needed for WINGRAF, DEL will delete the old key, and the sequence -L selects the length of the records to be defined by the number of defined items.

After the IMPO Record there is an arbitrary number of records with the Name IMPD and up to 48 Data values (Items V01 to V48). Each of those values may be specified with an explicit dimension. If the input unit system has been selected with PAGE to a value >0, all data is converted following the units specified in the description. Literals are possible if the structure in the database is marked for those possibilities.

```
e.g.    IMPO 'N\_DISP/101'  'NR,UZ,URX,URY'  'MAMI-L'
        IMPD  1  0.0234  0.1234  0.0034
        IMPD  2  0.0234  0.1234  0.0034
```

3.37 ECHO – Control of the Output

ECHO

Item	Description	Unit	Default
OPT	A literal from the following list: MAT Material properties SECT Cross section properties NODE Node parameters QUAD 2-D elements BRIC 3-D elements BEAM Bending beams and piles, truss and cable elements BOUN Spring and boundary elements SYST System values, list of groups, cross section types and elements STAT Analysis statistics FULL All the above options	*LIT*	FULL
VAL	Output extent NO no output YES regular output FULL Extended output EXTR Most extended output	*LIT*	YES

The record name ECHO must always be repeated for each record, otherwise confusion may occur with other records with similar names (e.g. NODE).

The default value corresponds to the regular output, as long as the system has been generated error free.

ECHO-Option SYST may be defined instead of NO/YES/FULL/EXTR as a numerical value of a bitpattern:

1	General primary group statistics
2	Beam / Truss / Cable statistics
4	Area elements statistics
8	Volume elements statistics
16	Ordered by primary groups respectively by structural members for design elements

32	Ordered by cross-sections
64	Ordered by material (not for design elements)
128	Sum of reinforcements
256	Detailed sum of area element reinforcements
1024	Nodal masses
2048	Life cycle assessment
4096	Life cycle assessment per elements type
8192	Only life cycle assessment, without group statistics or masses
16384	Only the sums of Finite Elements
32768	Sum of tendons
65536	Design elements
131072	Ordered by secondary groups defined by user
262144	Ordered by all secondary groups
524288	Only calculating the statistic and saving in database, but no print out

ECHO-Option SYST saves the results of the evaluation also in the database as CADINP-Variables. The arrays of variables GRP_MASS, SCT_MASS and MAT_MASS as well as GRP_REIN and SCT_REIN contain the masses (MASS) and reinforcements (REIN) of all groups (GRP_) and section numbers (SCT_) or Materials (MAT_), where the index 0 contains the total sum.

4 Output Description

If the defaults of the record ECHO are used, all the input values are also output. This can be prevented by setting ECHO FULL NO.

The options of the ECHO record enable one to obtain a selective output, e.g. ECHO NODE NO means that node data should not be printed.

The results of the profile optimisation are output on the screen as well as in the protocol file. The band width and the profile are output here without consideration of the degrees of freedom per node.

4.1 Group Attributes

The table of the group attributes is printed always first. Only with switching off of the complete output with ECHO FULL NO this table is also not printed.

Groups

Grp	Group number
number	Number of the corresponding type
type	Type of the elements
	QUAD - plane elements
	BRIC - three-dimensional solid elements
	BEAM - beam elements
	TRUS - truss elements
	CABL - cable elements
	SPRI - spring elements
	BOUN - boundary elements
	DAMP - damping elements
	FLEX - general elastic elements
	KINE - kinematic constraints
min-no	Minimum possible element number of the group
max-no	Maximum available element number of the group
top-no	Maximum element number of the group
Title	Title of the group

4.2 Nodal Values

With ECHO NODE YES all nodal coordinates and their relevant supports (nodal constraints) and kinematic constraints are output.

The nodal coordinates and supports in the list mean the following:

nodal coordinates and supports

Number	Node number
X	X-coordinate in m
Y	Y-coordinate in m
Z	Z-coordinate in m
Support Conditions	Support conditions of a node (Explanation of the abbreviation in record NODE)
MIN	minimal coordinate value
MAX	maximal coordinate value

Depending on the input, a list of the kinematic constraints is generated additionally. If kinematic constraints or intermediate nodes with INTE in record NODE are input, the following list is generated:

Kinematic Constraints

Grp	Group number
LV	Level of kinematic constraint for recursive definition
Node	Node number
type	Coupling condition (Explanation of the abbreviation in record NODE) or by definition
	intermediate node: Type of interpolation
	INTtyp (Explanation of type see INTE record NODE)
reference	Reference node
dx,dy,dz	Directions of the kinematic constraints or effective distances between the nodes
df	general factor, indicates where the intermediate node (INTE) lies between the reference nodes

Print of dependencies is the result of the combination of all specified conditions, i.e. a constraint may have become a true support or two radial dependencies may have become a tangential one, etc.. Further the dependencies are printed in the most recent convention, ie, a constraint type KPX0 defines a dependency of the displacement only, while KPX or KPXY define constraints fullfilling the equilibrium of moments.

For the input of the kinematic dependencies with the record KINE, the following list is generated:

Grp	Group number
LV	Level of coupling for recursive definition
Node	Dependent node
ND	Dependent degree of freedom, denoted with local degree of freedom
ND1	Reference degree of freedom 1, denoted with node number/local degree of freedom with X,Y,Z for the displacements and XX,YY,ZZ for the rotations
FD1	Factor for reference degree of freedom 1
.	
.	
.	
ND6	
FD6	

If an input of single masses is made with the record MASS, then these are output as follows:

Nodal Masses

Node	Node number
Group	Number of the group
M-X,M-Y,M-Z [kg]	Translational masses
M-XX,M-YY,M-ZZ [kgm2]	Rotational masses

4.3 Plane Elements (2-D, QUAD)

The output-list of the plane elements is generated with ECHO QUAD YES (default). The items in the list of plane elements mean the following:

Flat Elements

Grp	Group number
Number	Element number
Node	Node numbers of the corner nodes
Node	
Node	
Node	
MNo	Material number
t [m]	Thickness of the element
C [kN/m3]	Elastic foundation

direction local x	Direction of the local x axis
Orthotropic thickn.	Orthotropic thicknesses of the element in m
TX,TY,TXY,TD	(Output occurs only in case of deviations to the thickness.)
Variable thickness	Variable thicknesses of the elements in m
t1 - t4	(An output occurs only for different thicknesses in the nodes.)

4.4 Three-dimensional Solid Elements (3-D, BRIC)

With the input ECHO BRIC YES (default), the three-dimensional solid elements are output in the following list:

Solid Elements

Grp	Number of the group
Number	Element number
Node	Number of the node 1
Node	Number of the node 2
Node	Number of the node 3
Node	Number of the node 4
Node	Number of the node 5
Node	Number of the node 6
Node	Number of the node 7
Node	Number of the node 8
MNo	Material number of the element

4.5 Boundary Elements

With the record ECHO BOUN YES (default), the lists of the boundary elements (BOUN), the element matrices or supports (FLEX), the damping elements (DAMP) and the single masses (MASS) are output.

After the input of the record BOUN - distributed elastic supports, the following list appears:

Supporting Lines

from	Starting node or element number of the boundary
to	End node number
inc	Increment
type	Direction of support
ref	Axis for the increase (global)
CA/CB	Spring constants at the beginning/end

Title/Direction	Title of the boundary element and direction
Total Length	Total Length in m

After the input of the record FLEX - general elastic element, an element matrix is supplied in the output-list:

for single nodes:

Flexible Supported Nodes

Number	Number of the element
Node	Node number, negative for substructure
F-xx,F-yy,F-zz,	Values of the flexibility matrix
FR-xx,FR-yy,FR-zz,	
FR-ww	

for boundaries:

Additional Stiffness

Number	Number of the element
Node	Node numbers, negative for substructure
S-xx,S-yy,S-zz,	Values of the stiffness matrix
SR-xx,SR-yy,SR-zz	

For the substructure-technique the shift-values of the stiffness are output.

If damping elements were defined with the record DAMP, a list of the damping elements is output:

Damper Elements

Grp	Number of the group
Number	Element number
Node	Start node
Node	End node
dX,dY,dZ [-]	Indication of direction of the damping element
DP [kNsec/m]	Damping in axial direction
DT [kNsec/m]	Damping in lateral direction
DM [kNmsec]	Damping moment about the axis

4.6 Bending Beams and Piles

The output of the bending beams and piles occurs with ECHO BEAM YES (default).

For the defined bending beams and piles (BEAM) the following list is output:

Beam Elements

Grp	Group number
Number	Beam number
Node	Number of the start and/or end beam node
x [m]	Distance from the beginning of the beam in m
NoS	Cross section number
	An i at the cross section number designates, whether it is possible to interpolate this cross section.
NoP	Number of the bedding profile reference Reference axis
Hinges	Hinge combination (Explanation of the abbreviation see record BEAM , shear forces are abbreviated with V..)
direction local y-axis	Direction information about local y-axis
beta-y/z	Buckling length coefficient for main and transverse bending

After the definition of beam sections with the record BSEC, the additional information is added to the output list of the bending beams, these include the type, the direction and the position of the defined beam sections (for further explanations see BEAM and BSEC).

4.7 Truss Elements

A list of truss elements is generated with ECHO BEAM YES (default). Here the items of the list mean:

Truss Elements

Grp	Number of the group
Number	Number of the truss beam
Node	Start node
Node	End node
section	Cross section number
L [m]	Length
N-p [kN]	Prestressing force

4.8 Cable Elements

With ECHO BEAM YES (default) the following list of cable elements is output also:

Cable Elements

Grp	Number of the group
Number	Number of the cable element
Node	Start node
Node	End node
section	Cross section number
L [m]	Length
N-p [kN]	Prestressing force

4.9 Springs

Spring values are output as the boundary elements with ECHO BOUN YES (default). The general spring values are printed in the list of the spring elements:

Spring Elements

Grp	Number of the group
Number	Spring number
Node	Number of node upon which the spring acts
Node	Number of a second node
dX,dY,dZ [-]	Components of direction X,Y,Z
CP [kN/m]	Axial spring constant in kN/m
CT [kN/m]	Lateral spring constant in kN/m
CM [kNm]	Rotational spring constant in kNm/rad
e-P,e-T,e-M [-]	Exponents for non-linear damping
DP [kNsec/m]	Damping in axial direction
DT [kNsec/m]	Damping in lateral direction
DT [kNmsec]	Damping moment about the axis

The list of the non-linear effects is only generated, if one of these items is defined:

Special Effects of Spring Elements

Grp	Number of the group
Number	Spring number
MNo	Number of stress-strain curve / material

A/I-ref [m2]	Reference area
Prestr. [kN] [kNm]	Prestress force in kN and/or kNm
Gap [mm]	Spring gap (slip) in mm
Cutoff [kN] [kNm]	Spring failure load
Yielding [kN] [kNm]	Spring yield load
tan-r [-]	Friction coefficient for the lateral spring
cohesion [kN]	Cohesion value for the lateral spring
tan-d [-]	Dilatation value for the lateral spring

4.10 System Statistics

A list of several beam, plane and volume elements is generated with ECHO SYST YES (default):

Summary of all beam elements

Groups

Grp	Number of the group
TotLength	Total length
Max.Length	Maximum length
TotMass	Total mass

Summary of all planar elements

Groups

Grp	Number of the group
TotArea	Total area
TotVolume	Total volume
TotMass	Total mass
Material No.	Material number

Summary of all volume elements

Groups

Grp	Number of the group
TotVolume	Total volume
TotMass	Total mass
Material No.	Material number

A list of several cross section types according to the input of BEAM, TRUS, CABL is generated with ECHO SYST FULL (default):

Cross sections

No.	Number of cross section
TotLength	Total length
Max.Length	Maximum length
TotMass	Total mass
Title	Title of the cross section

4.11 Analysis Time per Task

A table of the analysis time per task and of the total time is printed with ECHO STAT FULL, if the button for the statistics is activated in URSULA:

```
E l a p s e d   A n a l y s i s   T i m e
Initialise the system.......................: CPU =  8.33  WCT =  8 [sec]
ASCII Input with CADINP and processing......: CPU =  0.44  WCT =  0 [sec]
Saving data from mesh generation............: CPU =  0.03  WCT =  0 [sec]
Postprocessing of the mesh generation.......: CPU =  0.06  WCT =  0 [sec]
Printoutput of generated system.............: CPU =  0.08  WCT =  0 [sec]
Optimum node numbering......................: CPU =  0.08  WCT =  0 [sec]
                                             CPU =  9.66  WCT =  9 [sec]
```

Bibliography

[1] O.C. Zienkiewicz. *Methode der finiten Elemente, 2.Auflage*. Hanser Verlag München, 1984.
[2] E. Ramm, J. Müller, and K. Wassermann. *Problemfälle bei FE-Modellierungen*. 1990.
[3] C. Katz and J. Stieda. *Praktische FE-Berechnungen mit Plattenbalken*. Bauinformatik 1, 1992.
[4] M. Gupta. *Error in Eccentric Beam Formulation*. Int.Journ.Num.Meth. in Engineering 11, 1977, p. 1473.
[5] O.C. Zienkiewicz and Zhu. *A simple error estimate and adaptive procedure for practical engineering analysis.* Int.Journ.Num.Meth. in Engineering 24, 1987, pp. 337–357.
[6] C. Katz. *Fehlerabschätzungen*. 1. FEM-Tagung, Kaiserslautern, 1989.
[7] F. Hartmann and C. Katz. *Statik mit finiten Elementen*. Springer Verlag Berlin, 1989.